Appendix 11-1:

Preliminary Design Drawings

Excelsior Energy Center

Town of Byron, New York

Civil Construction Plans

Issued for Review

REGIONAL MAP

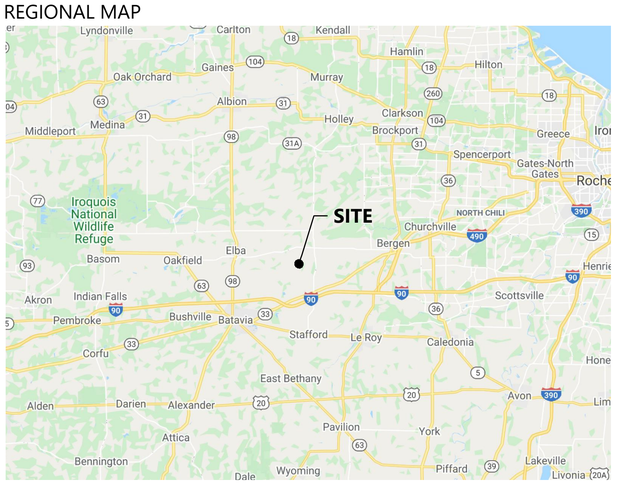

CONTACT INFORMATION			
CONSULTANT	**COMPANY**	**NAME**	**PHONE NUMBER**
PROJECT MANAGER	WESTWOOD	JACK HAYS	972-265-4871
ENGINEER OF RECORD	WESTWOOD	ALEX ALVARADO	214-473-4648
CLIENT	NEXTERA	JOE CARTAYA	561-604-4529
ENVIRONMENTAL CONSULTANT	TRC	KAITLIN MCCORMICK	716-221-4128

DATA SET INFORMATION		
BASE FILE	**FILE NAME/NOTES**	**PROVIDER**
CIVIL IMPROVEMENTS	0025418C-SITE	WESTWOOD
PV ARRAY	0025418EQUIP	WESTWOOD
ELECTRICAL LAYOUT	0025418EQUIP	WESTWOOD
BOUNDARY SURVEY	0025418V-MAPO	NEXTERA
TOPOGRAPHY	0025418V-ECON	NEXTERA
AERIAL	0025418V-AERIAL	WESTWOOD
WETLANDS	------	---
SUBSTATION	------	---

VICINITY MAP

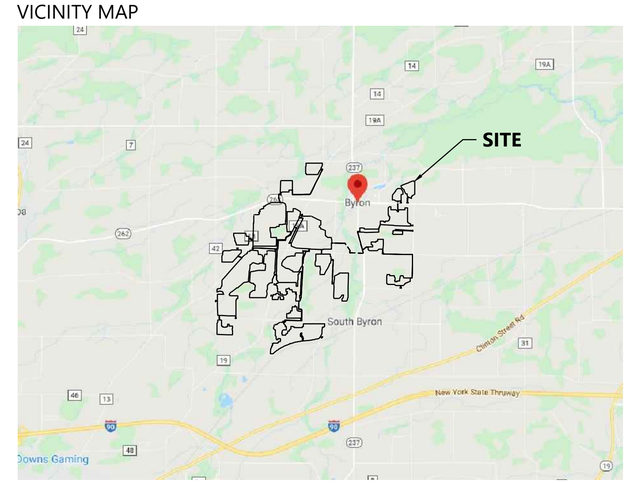

Sheet List Table

Sheet Number	Sheet Title
T.100	Cover
T.101	General Notes & Legend
C.100	Civil Site Plan Sheet Index
C.200	Overall Site Plan
C.300	Civil Site Plan - 1
C.301	Civil Site Plan - 2
C.302	Civil Site Plan - 3
C.303	Civil Site Plan - 4
C.304	Civil Site Plan - 5
C.305	Civil Site Plan - 6
C.306	Civil Site Plan - 7
C.307	Civil Site Plan - 8
C.308	Civil Site Plan - 9
C.309	Civil Site Plan - 10
C.310	Civil Site Plan - 11
C.311	Civil Site Plan - 12
C.312	Civil Site Plan - 13
C.313	Civil Site Plan - 14
C.314	Civil Site Plan - 15
C.315	Civil Site Plan - 16

Sheet List Table

Sheet Number	Sheet Title
C.316	Civil Site Plan - 17
C.317	Civil Site Plan - 18
C.318	Civil Site Plan - 19
C.319	Civil Site Plan - 20
C.320	Civil Site Plan - 21
C.321	Civil Site Plan - 22
C.322	Civil Site Plan - 23
C.323	Civil Site Plan - 24
C.324	Civil Site Plan - 25
C.325	Civil Site Plan - 26
C.326	Civil Site Plan - 27
C.327	Civil Site Plan - 28
C.328	Civil Site Plan - 29
C.329	Civil Site Plan - 30
C.330	Civil Site Plan - 31
C.331	Civil Site Plan - 32
C.332	Civil Site Plan - 33
C.333	Civil Site Plan - 34
C.334	Civil Site Plan - 35
C.335	Civil Site Plan - 36

Sheet List Table

Sheet Number	Sheet Title
C.336	Civil Site Plan - 37
C.337	Civil Site Plan - 38
C.338	Civil Site Plan - 39
C.339	Civil Site Plan - 40
C.340	Civil Site Plan - 41
C.341	Civil Site Plan - 42
C.342	Civil Site Plan - 43
C.343	Civil Site Plan - 44
C.344	Civil Site Plan - 45
C.345	Civil Site Plan - 46
C.346	Civil Site Plan - 47
C.347	Civil Site Plan - 48
C.348	Civil Site Plan - 49
C.400	Tree Clearing Plan - 1
C.401	Tree Clearing Plan - 3
C.402	Tree Clearing Plan - 2
C.403	Tree Clearing Plan - 4
C.404	Tree Clearing Plan - 5
C.405	Tree Clearing Plan - 6
C.406	Tree Clearing Plan - 7

Sheet List Table

Sheet Number	Sheet Title
C.407	Tree Clearing Plan - 8
C.408	Tree Clearing Plan - 9
C.409	Tree Clearing Plan - 10
C.410	Tree Clearing Plan - 11
C.411	Tree Clearing Plan - 12
C.412	Tree Clearing Plan - 13
C.413	Tree Clearing Plan - 14
C.414	Tree Clearing Plan - 15
C.415	Tree Clearing Plan - 16
C.416	Tree Clearing Plan - 17
C.417	Tree Clearing Plan - 18
C.418	Tree Clearing Plan - 19
C.419	Tree Clearing Plan - 20
C.420	Tree Clearing Plan - 21
C.421	Tree Clearing Plan - 22
C.422	Tree Clearing Plan - 23
C.423	Tree Clearing Plan - 24
C.424	Tree Clearing Plan - 25
C.425	Tree Clearing Plan - 26
C.426	Tree Clearing Plan - 27

Sheet List Table

Sheet Number	Sheet Title
C.427	Tree Clearing Plan - 28
C.428	Tree Clearing Plan - 29
C.429	Tree Clearing Plan - 30
C.430	Tree Clearing Plan - 31
C.431	Tree Clearing Plan - 32
C.432	Tree Clearing Plan - 33
C.433	Tree Clearing Plan - 34
C.434	Tree Clearing Plan - 35
C.435	Tree Clearing Plan - 36
C.436	Tree Clearing Plan - 37
C.437	Tree Clearing Plan - 38
C.438	Tree Clearing Plan - 39
C.439	Tree Clearing Plan - 40
C.440	Tree Clearing Plan - 41
C.441	Tree Clearing Plan - 42
C.442	Tree Clearing Plan - 43
C.443	Tree Clearing Plan - 44
C.444	Tree Clearing Plan - 45
C.445	Tree Clearing Plan - 46
C.446	Tree Clearing Plan - 47

Sheet List Table

Sheet Number	Sheet Title
C.447	Tree Clearing Plan - 48
C.448	Tree Clearing Plan - 49
C.600	Construction Details - 1
C.601	Construction Details - 2
C.602	Construction Details - 3
C.603	Construction Details - 4
C.604	Construction Details - 5
C.605	New York Erosion Control Details - 1
C.606	New York Erosion Control Details - 2
C.607	New York Erosion Control Details - 3
C.608	New York Erosion Control Details - 4
C.609	Construction Notes
C.610	Tree Clearing Notes
E.650	Trench Details - 1
E.651	Trench Details - 2
E.652	Trench Details - 3

Westwood

Phone (952) 937-5150
Fax (952) 937-5822
Toll Free (888) 937-5150

12701 Whitewater Drive, Suite #300
Minnetonka, MN 55343
westwoodps.com

Westwood Development Consultants, LLC

PREPARED FOR:

NEXTera ENERGY

700 Universe Boulevard
Juno Beach, FL 33408

REVISIONS:

#	DATE	COMMENT
A	06/12/20	Issued for Review
B	09/03/20	Issued for Review

Excelsior Energy Center

Town of Byron, New York

Cover

NOT FOR CONSTRUCTION

DATE: 09/03/2020

SHEET: T.100

GENERAL NOTES:

SURVEY NOTES:
1. TOPOGRAPHIC INFORMATION PROVIDED BY APEM, DATED JULY 2019.
2. PROPERTY BOUNDARY INFORMATION PROVIDED BY NEXTERA ENERGY, DATED 10/31/2020.
3. HORIZONTAL DATUM: NORTH AMERICAN DATUM OF 1983 (2011), STATE PLANE COORDINATE SYSTEM, NEW YORK WEST ZONE. VERTICAL DATUM: NAD83.
4. WETLAND BOUNDARY INFORMATION PROVIDED BY ------ DATED -------.
5. EXISTING TREELINE IS APPROXIMATE, BASED ON AERIAL PHOTOGRAPHY.
6. FLOOD ZONE CLASSIFICATION: UNAVAILABLE

SWPPP NOTE:
THE EROSION AND SEDIMENTATION CONTROL MEASURES FOR THIS PROJECT SHALL BE IN SUBSTANTIAL COMPLIANCE WITH THE STORMWATER POLLUTION PREVENTION PLAN (SWPPP) PREPARED FOR THE PROJECT IN ACCORDANCE WITH NEW YORK STATE DEPARTMENT OF ENVIRONMENTAL CONSERVATION STATE DISCHARGE POLLUTANT ELIMINATION SYSTEM GENERAL PERMIT FOR STORMWATER DISCHARGES FROM CONSTRUCTION ACTIVITY (GP-0-15-002), OR GP IN EFFECT AT COMMENCEMENT OF CONSTRUCTION ACTIVITIES.

REMOVAL NOTES:
1. TREES AND OTHER VEGETATION MAY BE REDUCED TO CHIPS BY THE USE OF CHIPPING MACHINES OR STUMP GRINDER AND USED AS REQUIRED FOR EROSION CONTROL. ALL OTHER CHIPS AND WOOD WASTE RESULTING FROM REMOVAL OPERATIONS SHALL BE DISPOSED OF OFF-SITE AT A FACILITY AND IN A MANNER APPROVED BY THE OWNER.
2. AREAS IDENTIFIED AS ARCHAEOLOGICAL AVOIDANCE AREAS SHALL BE CLEARED OF TREES ONLY. GROUND DISTURBANCE IS NOT PERMITTED. STUMPS SHALL BE CUT TO A MAXIMUM HEIGHT OF ONE (1) FOOT AND LEFT IN PLACE.
3. ALL DEMOLITION WASTE, DEBRIS AND RUBBISH SHALL BE PROPERLY REMOVED FROM THE SITE AS IT OCCURS. ALL MATERIALS SHALL BE PROPERLY DISPOSED OF OFF-SITE IN STRICT ACCORDANCE WITH ALL APPLICABLE LOCAL, STATE AND FEDERAL REGULATIONS.
4. TAKE NECESSARY PRECAUTIONS TO AVOID DAMAGE TO EXISTING IMPROVEMENTS AND FACILITIES TO REMAIN IN PLACE. CONTRACTOR IS RESPONSIBLE FOR REPAIR AND REPLACEMENT OF DAMAGED ITEMS AS A RESULT OF CONSTRUCTION OF THE PROPOSED IMPROVEMENTS.

SAFETY NOTE:
WORK WILL BE CARRIED OUT NEAR AND UNDER ENERGIZED EQUIPMENT. EXTREME CAUTION IS REQUIRED AT ALL TIMES. THE CONTRACTOR SHALL STRICTLY FOLLOW ALL NEW YORK POWER AUTHORITY (NYPA) SAFETY REQUIREMENTS WHEN WORKING WITHIN THE NYPA RIGHT-OF-WAY. FAILURE TO DO SO WILL RESULT IN TERMINATION.

EARTHWORK:
UNLESS INDICATED OTHERWISE REFER TO THE LATEST EDITION OF THE STATE OF NEW YORK, DEPARTMENT OF TRANSPORTATION, STANDARD SPECIFICATIONS FOR CONSTRUCTION AND MATERIALS FOR GENERAL REQUIREMENTS, PRODUCTS AND EXECUTION RELATED TO CONSTRUCTION OF BUT NOT LIMITED TO; CLEARING, GRUBBING, ROADS, UTILITY TRENCH EXCAVATION, BORROW, SUBGRADE, SUBBASE, GRANULAR FILL, AND AGGREGATE BASE.

PROJECT CONSTRUCTION SEQUENCING NOTES:
THE CONTRACTOR SHALL SUBMIT A CONSTRUCTION SEQUENCING OR CONSTRUCTION PHASING PLAN FOR OWNER APPROVAL THAT COMPLIES WITH PERMITTING REQUIREMENTS. THE PLAN SHALL SHOW THAT ACTIVE LAND DISTURBANCE ACTIVITIES WILL BE LIMITED TO LESS THAN FIVE (5) ACRES IN SIZE AND SHALL DISCUSS BUT IS NOT LIMITED TO THE FOLLOWING:
1. THE CONTRACTOR SHALL COMPLY WITH THE REQUIREMENTS FOR TEMPORARY AND PERMANENT EROSION AND SEDIMENT CONTROL MEASURES AS INDICATED AND THE NEW YORK STATE STANDARDS AND SPECIFICATIONS FOR EROSION AND SEDIMENT CONTROL.
2. PRIOR TO THE START OF ONSITE EARTHWORK ACTIVITIES, THE CONTRACTOR SHALL ESTABLISH THE CONSTRUCTION WORKSPACE LIMITS AND IDENTIFY AND MARK SENSITIVE RESOURCES.
3. THE CONTRACTOR SHALL INSTALL ALL TEMPORARY EROSION AND SEDIMENT CONTROL BEST MANAGEMENT PRACTICES (BMPs) IN ORDER TO PROTECT DOWN GRADIENT AREAS.
4. AFTER PERMANENT EROSION AND SEDIMENT CONTROL MEASURES ARE INSTALLED AND FUNCTIONING ON THE CURRENT CONSTRUCTION PHASE THE CONTRACTOR SHALL OBTAIN OWNER APPROVAL PRIOR TO BEGINNING EARTHWORK ON THE SUBSEQUENT CONSTRUCTION PHASE.

IF DISTURBING MORE THAN FIVE (5) ACRES, THE OWNER OR OPERATOR MUST OBTAIN PRIOR WRITTEN AUTHORIZATION FROM THE DEPARTMENT OF ENVIRONMENTAL CONTROL, OR IN AREAS UNDER THE JURISDICTION OF A REGULATED, TRADITIONAL LAND USE CONTROL MUNICIPAL SEPARATE STORM SEWER SYSTEM (MS4), THE REGULATED, TRADITIONAL LAND USE CONTROL MS4 (PROVIDED THE MS4 IS NOT THE OWNER OR OPERATOR OF THE CONSTRUCTION ACTIVITY). AT A MINIMUM, THE OWNER OR OPERATOR MUST COMPLY WITH THE FOLLOWING REQUIREMENTS IN ORDER TO BE AUTHORIZED TO DISTURB GREATER THAN FIVE (5) ACRES OF SOIL AT ANY ONE TIME:
1. THE OWNER OR OPERATOR SHALL HAVE A QUALIFIED INSPECTOR CONDUCT AT LEAST TWO (2) SITE INSPECTIONS IN ACCORDANCE WITH PART IV.C. OF THIS PERMIT EVERY SEVEN (7) CALENDAR DAYS, FOR AS LONG AS GREATER THAN FIVE (5) ACRES OF SOIL REMAIN DISTURBED. THE TWO (2) INSPECTIONS SHALL BE SEPARATED BY A MINIMUM OF TWO (2) FULL CALENDAR DAYS.
2. IN AREAS WHERE SOIL DISTURBANCE ACTIVITY HAS TEMPORARILY OR PERMANENTLY CEASED, THE APPLICATION OF SOIL STABILIZATION MEASURES MUST BE INITIATED BY THE END OF THE NEXT BUSINESS DAY AND COMPLETED WITHIN SEVEN (7) DAYS FROM THE DATE THE CURRENT SOIL DISTURBANCE ACTIVITY CEASED. THE SOIL STABILIZATION MEASURES SELECTED SHALL BE IN CONFORMANCE WITH THE TECHNICAL STANDARD, AND THE NEW YORK STATE STANDARDS AND SPECIFICATIONS FOR EROSION AND SEDIMENT CONTROL, DATED NOVEMBER 2016.
3. THE OWNER OR OPERATOR SHALL PREPARE A PHASING PLAN THAT DEFINES MAXIMUM DISTURBED AREA PER PHASE AND SHOWS REQUIRED CUTS AND FILLS.
4. THE OWNER OR OPERATOR SHALL INSTALL ANY ADDITIONAL SITE-SPECIFIC PRACTICES NEEDED TO PROTECT WATER QUALITY.
5. THE OWNER OR OPERATOR SHALL INCLUDE THE REQUIREMENTS ABOVE IN THE SWPPP.

PROJECT DETAILS

PROPERTY AREA (ACRES)	3,362
FENCED AREA (ACRES)	1,630
FENCING LENGTH (LF)	192,263
ACCESS ROAD LENGTH (LF)	143,757
LIMITS OF DISTURBANCE (ACRES)	1,718
TREE CLEARING (ACRES)	28.03

HORIZONTAL DIRECTIONAL DRILLING TABLE

LOCATION	LENGTH	CIVIL PLAN SHEET
CROSSING OF WETLAND (W-JJB-27)	180 FT	C.319
CROSSING OF WETLAND (W-JJB-27)	275 FT	C.319
CROSSING OF WETLAND (W-JJB-33)	320 FT	C.323
CROSSING OF STREAM & WETLAND (S-JJB-12, W-JJB-31)	565 FT	C.324, C.328
CROSSING OF WETLAND (W-JDV-04)	170 FT	C.334
CROSSING OF STREAM (S-IBP-2)	297 FT	C.340
CROSSING OF STREAM (S-IBP-1)	295 FT	C.341
CROSSING OF WETLAND (W-JJB-13)	490 FT	C.347, C.348
CROSSING OF STREAM (S-JJB-06)	337 FT	C.321

CULVERT NUMBER	CULVERT LENGTH	INLET	OUTLET	CULVERT SIZE	SHEET
DC-01	46	631	630	12"	C.300
DC-02	46	652.5	652	18"	C.302
DC-05	75	680.5	679.5	3-24"	C.305
DC-08	46	633.5	632	12"	C.333
DC-09	46	675	674	1-24"	C.337
DC-10	46	672	671.5	2-24"	C.339
DC-11	46	638.5	638	3-18"	C.338
DC-12	46	665	664.5	1-36"	C.342
DC-13	46	704	703	2-24"	C.313
DC-14	46	690	689.5	2-18"	C.306
DC-15	46	690	689	24"	C.306
DC-17	46	688	687.5	2-24"	C.315

CULVERT NUMBER	CULVERT LENGTH	INLET	OUTLET	CULVERT SIZE	SHEET
DC-18	46	706	704	2-24"	C.311
DC-19	46	671.5	671	2-24"	C.313
DC-20	46	657.5	656	12"	C.314
DC-21	46	717	716.5	18"	C.312
DC-22	-	-	-	12"	C.321
DC-25	49	733	732.5	2-24"	C.325
DC-26	46	730.5	730	18"	C.325
DC-27	75	696.5	695	3-24"	C.318
DC-28	53	688.5	688	18"	C.323
DC-29	53	-	-	12"	C.323
DC-30	46	663	660	2-24"	C.345
DC-31	57	687	685.5	24"	C.328

CULVERT NUMBER	CULVERT LENGTH	INLET	OUTLET	CULVERT SIZE	SHEET
DC-32	46	688.5	687.5	18"	C.327
DC-33	46	698	697	18"	C.331
DC-34	46	704.5	703	24"	C.348

SOIL PROPERTIES TABLE

Map unit symbol	Map unit name	Rating	Acres in AOI	Percent of AOI
Ad	Alden mucky silt loam	C/D	79.5	0.70%
ApA	Appleton silt loam, 0 to 3 percent slopes	B/D	721.9	6.80%
ApB	Appleton silt loam, 3 to 8 percent slopes	B/D	53.3	0.50%
ArB	Arkport very fine sandy loam, 1 to 6 percent slopes	A	101.6	1.00%
ArC	Arkport very fine sandy loam, 6 to 12 percent slopes	A	19	0.20%
AsD	Arkport and Dunkirk soils, 12 to 20 percent slopes	A	37	0.30%
AsE	Arkport and Dunkirk soils, 20 to 40 percent slopes	A	1.9	0.00%
AuA	Aurora silt loam, 0 to 3 percent slopes	D	6.3	0.10%
AuB	Aurora silt loam, 3 to 8 percent slopes	D	26.2	0.20%
CaA	Canandaigua silt loam, 0 to 2 percent slopes	C/D	191.2	1.80%
CbA	Canandiagua mucky silt loam, 0 to 2 percent slopes	C/D	21	0.20%
CcA	Carlisle muck	A/D	40.2	0.40%
CeA	Cazenovia silt loam, 0 to 3 percent slopes	C/D	28.1	0.30%
CeB	Cazenovia silt loam, 3 to 8 percent slopes	C/D	780.2	7.30%
CeC	Cazenovia silt loam, 8 to 15 percent slopes	C/D	180.5	1.70%
CgC3	Cazenovia silty clay loam, 8 to 15 percent slopes, eroded	C/D	12.9	0.10%
CgD3	Cazenovia silty clay loam, 15 to 25 percent slopes, eroded	C/D	18.6	0.20%
ClB	Collamer silt loam, 2 to 6 percent slopes	C/D	196.1	1.80%
CmC	Colonie loamy fine sand, 6 to 12 percent slopes	A	28.1	0.30%
DuB	Dunkirk silt loam, 2 to 6 percent slopes	C	11.4	0.10%
DuC	Dunkirk silt loam, 6 to 12 percent slopes	C	8.7	0.10%
Ed	Edwards muck	C/D	5.3	0.00%
Fo	Fonda mucky silt loam	C/D	38.1	0.40%
FpA	Fredon gravelly loam, 0 to 3 percent slopes	B/D	43.8	0.40%
GnA	Galen very fine sandy loam, 0 to 2 percent slopes	A/D	1.3	0.00%
GnB	Galen very fine sandy loam, 2 to 6 percent slopes	A/D	51.4	0.50%
GP	Gravel pits		8.6	0.10%
HaA	Halsey silt loam, 0 to 4 percent slopes	B/D	19.8	0.20%
Hf	Hamlin silt loam	B	24.4	0.20%
HlA	Hilton loam, 0 to 3 percent slopes	B/D	382.1	3.60%
HlB	Hilton loam, 3 to 8 percent slopes	B/D	635.2	6.00%
La	Lakemont silty clay loam, 0 to 3 percent slopes	D	277.3	2.60%
Ld	Lamson very fine sandy loam	A/D	66.8	0.60%
Le	Lamson mucky very fine sandy loam	A/D	40.1	0.40%
LmA	Lima silt loam, 0 to 3 percent slopes	B/D	340.6	3.20%

SOIL PROPERTIES TABLE

Map unit symbol	Map unit name	Rating	Acres in AOI	Percent of AOI
LmB	Lima silt loam, 3 to 8 percent slopes	B/D	886.6	8.30%
LoA	Lyons soils, 0 to 3 percent slopes	C/D	99.4	0.90%
Ma	Madalin silty clay loam, 0 to 3 percent slopes	C/D	9	0.10%
MnA	Minoa very fine sandy loam, 0 to 2 percent slopes	B/D	17.2	0.20%
NeA	Newstead silt loam, 0 to 3 percent slopes	C/D	8.9	0.10%
NgA	Niagara silt loam, 0 to 2 percent slopes	C/D	103.6	1.00%
Oa	Oatka silty clay loam	C/D	4.2	0.00%
OdA	Odessa silt loam, 0 to 3 percent slopes	D	121.7	1.10%
OdB	Odessa silt loam, 3 to 8 percent slopes	D	127.4	1.20%
OnA	Ontario loam, 0 to 3 percent slopes	B	187.8	1.80%
OnB	Ontario loam, 3 to 8 percent slopes	B	1,151.80	10.80%
OnC	Ontario loam, 8 to 15 percent slopes	B	172.4	1.60%
OnD	Ontario loam, 15 to 25 percent slopes	B	11.6	0.10%
OrE	Ontario and Lansing soils, 25 to 40 percent slopes	B	8.2	0.10%
OsB	Ontario loam, 3 to 8 percent slopes, stony	B	27.2	0.30%
OvA	Ovid silt loam, 0 to 3 percent slopes	C/D	607.1	5.70%
OvB	Ovid silt loam, 3 to 8 percent slopes	C/D	1,133.10	10.60%
Pd	Palms muck	B/D	50	0.50%
PhA	Palmyra gravelly loam, 0 to 3 percent slopes	A	47.8	0.40%
PhB	Palmyra gravelly loam, 3 to 8 percent slopes	A	106.6	1.00%
PhC	Palmyra gravelly loam, 8 to 15 percent slopes	A	137	1.30%
PkD	Palmyra and Arkport soils, 15 to 25 percent slopes	A	35.1	0.30%
PkE	Palmyra and Arkport soils, 25 to 40 percent slopes	A	18.7	0.20%
PsA	Phelps gravelly loam, 0 to 3 percent slopes	B/D	13	0.10%
PsB	Phelps gravelly loam, 3 to 8 percent slopes	B/D	57.5	0.50%
QU	Quarries		2.2	0.00%
RsA	Romulus silt loam, 0 to 3 percent slopes	C/D	59.9	0.60%
SeB	Schoharie silt loam, 1 to 6 percent slopes	D	111	1.00%
ShC3	Schoharie silty clay loam, 6 to 12 percent slopes	D	71.5	0.70%
ShD3	Schoharie silty clay loam, 12 to 20 percent slopes	D	15.6	0.10%
SlE3	Schoharie silty clay loam, 20 to 60 percent slopes	D	10	0.10%
Te	Teel silt loam	B/D	151.2	1.40%
Uf	Udorthents, loamy skeletal	A	4.9	0.00%
W	Water		55.8	0.50%
Wk	Wakeville silt loam	B/D	323.8	3.00%
WsB	Wassaic silt loam, 2 to 8 percent slopes	C	13.4	0.10%

Westwood
Phone (952) 937-5150 12701 Whitewater Drive, Suite #300
Fax (952) 937-5822 Minnetonka, MN 55343
Toll Free (888) 937-5150 westwoodps.com
Westwood Development Consultants, LLC

PREPARED FOR:
NEXTera ENERGY
700 Universe Boulevard
Juno Beach, FL 33408

REVISIONS:

#	DATE	COMMENT
A	06/12/20	Issued for Review
B	09/03/20	Issued for Review

Excelsior Energy Center
Town of Byron, New York

General Notes & Legend

NOT FOR CONSTRUCTION

DATE: 09/03/2020

SHEET: T.101

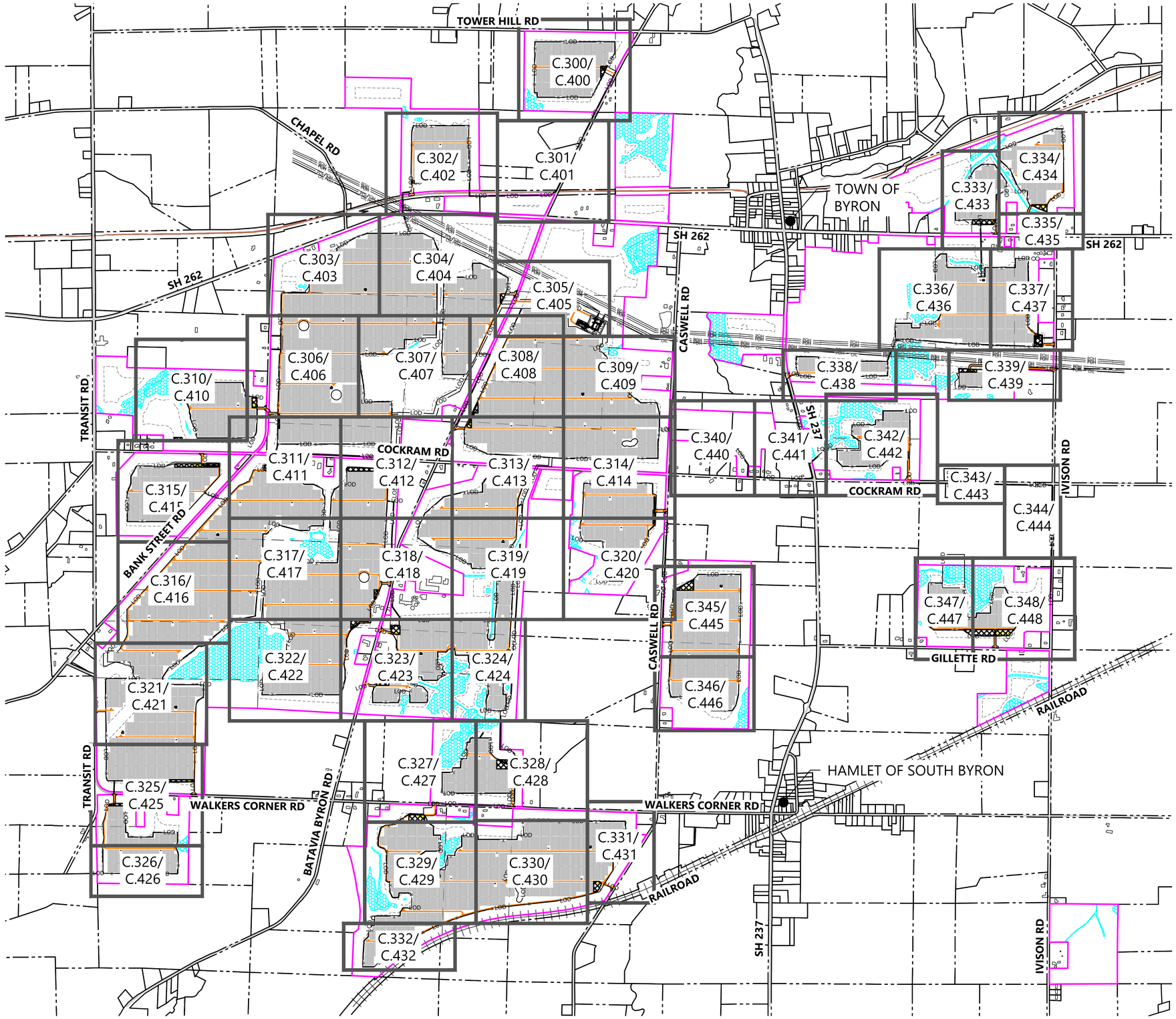

LEGEND:

- PROPERTY LINE
- PARCEL LINE
- LOT LINE
- EX. PAVED ROAD
- EX. GRAVEL ROAD
- EX. OVERHEAD POWER LINE
- EX. OIL PIPELINE
- EX. STRUCTURE
- EX. WETLAND
- PROPOSED SOLAR ARRAY
- PROPOSED ACCESS ROAD
- PROPOSED SECURITY FENCE
- PROPOSED ELECTRICAL EQUIPEMENT
- EX. RAILROAD
- PROPOSED MODULE SETBACK
- LIMIT OF DISTURBANCE
- PROPOSED LAYDOWN YARD
- PROPOSED PARKING
- C.XXX SHEET NUMBER

Westwood

Phone (952) 937-5150
Fax (952) 937-5822
Toll Free (888) 937-5150

12701 Whitewater Drive, Suite #300
Minnetonka, MN 55343
westwoodps.com

Westwood Development Consultants, LLC

PREPARED FOR:

NEXTera ENERGY

700 Universe Boulevard
Juno Beach, FL 33408

REVISIONS:

#	DATE	COMMENT
A	06/12/20	Issued for Review
B	09/03/20	Issued for Review

0' 1000' 2000' 3000'

Excelsior Energy Center

Town of Byron, New York

Civil Site Plan Sheet Index

NOT FOR CONSTRUCTION

DATE: 09/03/2020

SHEET: C.100

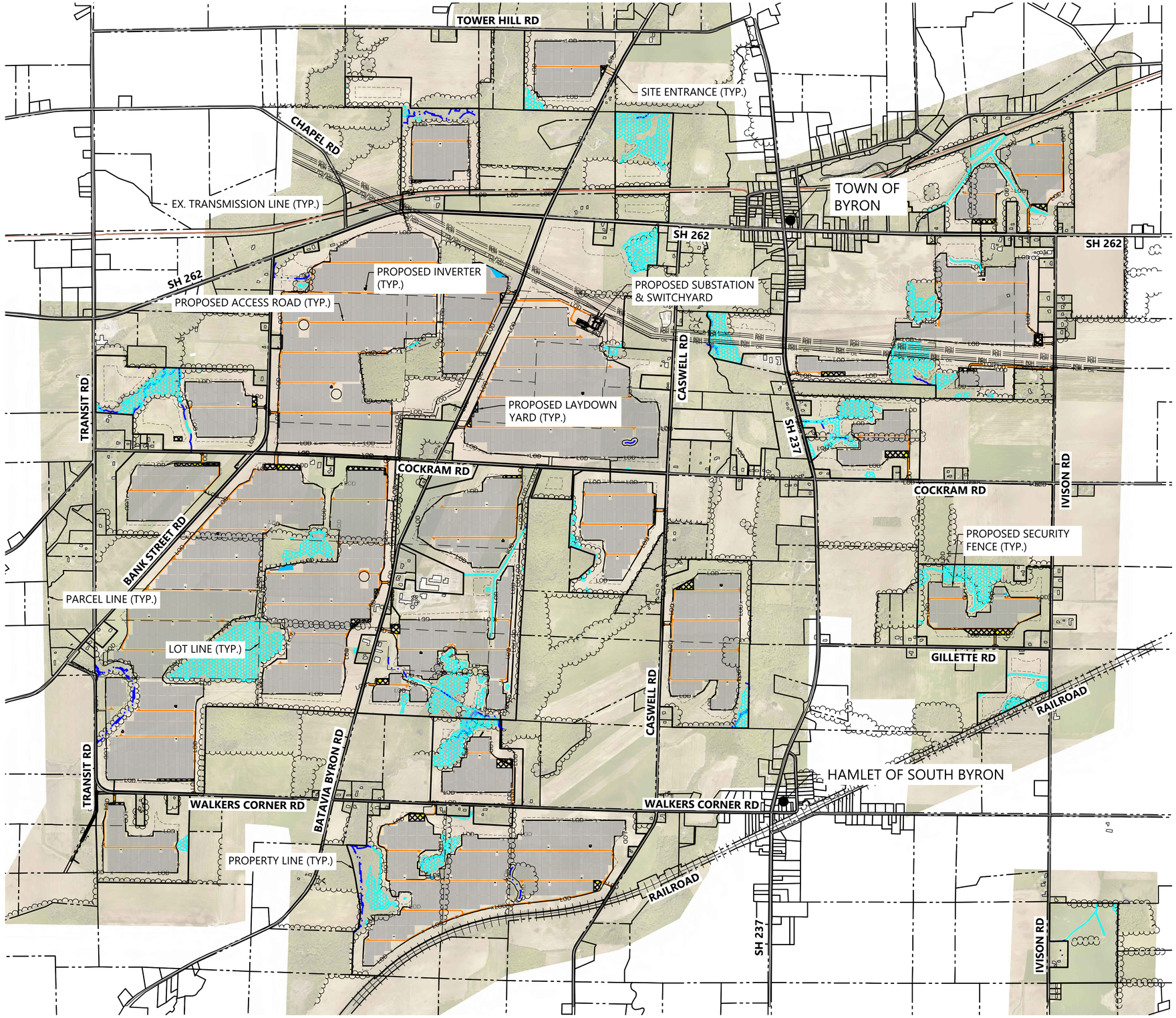

LEGEND:

- PROPERTY LINE
- PARCEL LINE
- LOT LINE
- EX. PAVED ROAD
- EX. GRAVEL ROAD
- EX. OVERHEAD POWER LINE
- EX. OIL PIPELINE
- EX. STRUCTURE
- EX. WETLAND
- EX. STREAM
- PROPOSED FILTRATION BASIN
- PROPOSED SOLAR ARRAY
- PROPOSED ACCESS ROAD
- PROPOSED SECURITY FENCE
- PROPOSED ELECTRICAL EQUIPEMENT
- EX. RAILROAD
- EX. TREELINE
- PROPOSED BUILDABLE AREA
- LIMIT OF DISTURBANCE
- PROPOSED LAYDOWN YARD
- PROPOSED PARKING AREA

Westwood

Phone (952) 937-5150
Fax (952) 937-5822
Tol Free (888) 937-5150

12701 Whitewater Drive, Suite #300
Minnetonka, MN 55343
westwoodps.com

Westwood Development Consultants, LLC

PREPARED FOR:

NEXTera ENERGY

700 Universe Boulevard
Juno Beach, FL 33408

REVISIONS:

#	DATE	COMMENT
A	06/12/20	Issued for Review
B	09/03/20	Issued for Review

N

0' 1000' 2000' 3000'

Excelsior Energy Center

Town of Byron, New York

Overall Site Plan

NOT FOR CONSTRUCTION

DATE: 09/03/2020

SHEET: C.200

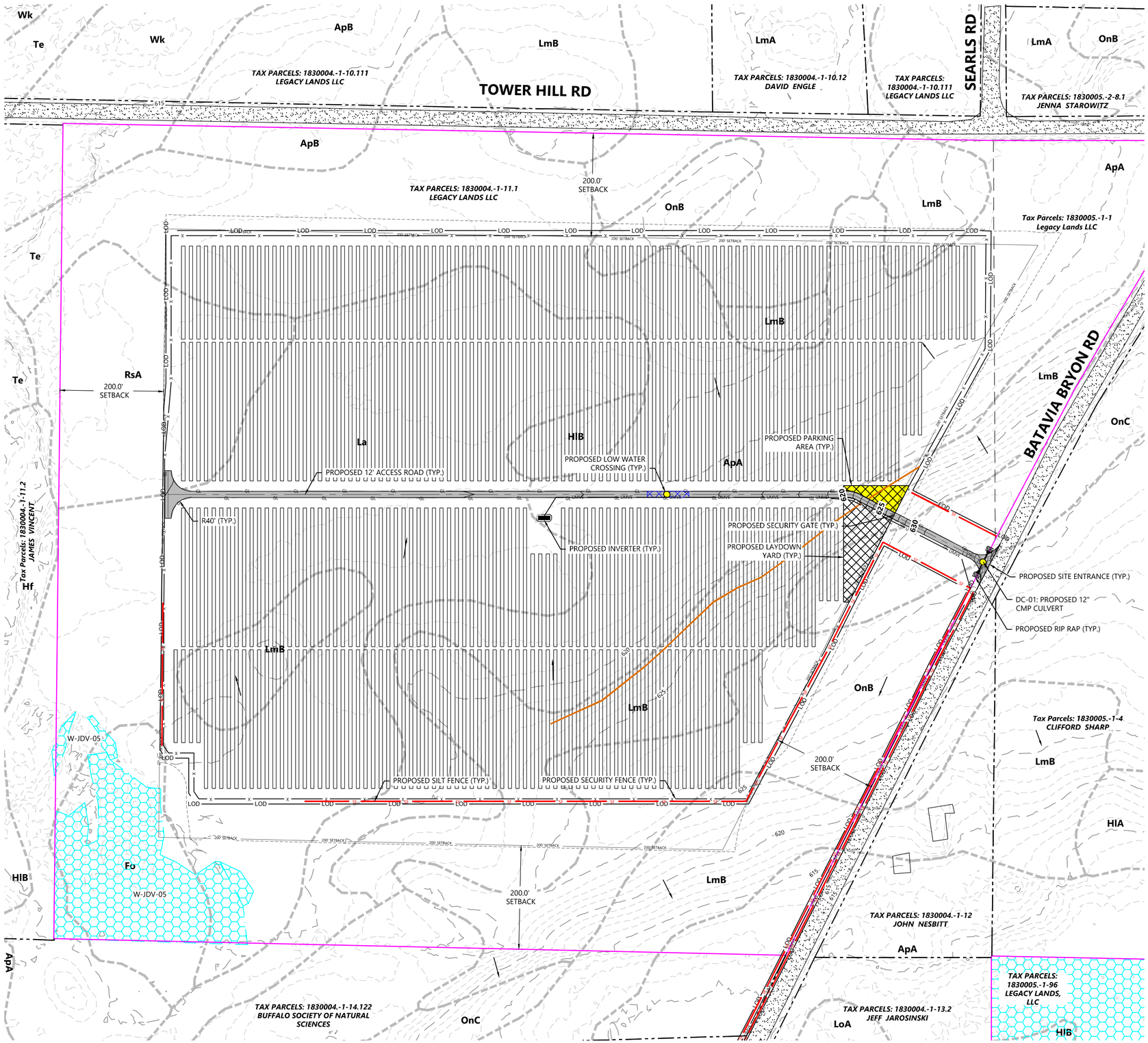

SEE SHEET C.301

LEGEND:

- PROPERTY LINE
- PARCEL LINE
- LOT LINE
- RIGHT-OF-WAY LINES
- EASEMENT LINES
- EX. STREAM
- EX. EDGE OF WATER
- EX. TREELINE
- EX. WETLAND
- EX. SOILS
- EX. OVERHEAD POWER
- EX. POWER POLE
- EX. UNDERGROUND POWER
- EX. GAS
- EX. OIL PIPELINE
- EX. GRAVEL ROAD
- EX. PAVED ROAD
- EX. INDEX CONTOUR
- EX. INTERVAL CONTOUR
- EX. FENCE
- EX. WATER LINE
- EX. CULVERT
- EX. STRUCTURE
- FLOW ARROW
- PROPOSED SOLAR ARRAY
- PROPOSED BUILDABLE AREA
- PROPOSED SETBACK LINE
- PROPOSED INVERTER
- PROPOSED BATTERY PACK
- PROPOSED ACCESS ROAD
- PROPOSED SECURITY FENCE
- PROPOSED UNDERGROUND COLLECTOR
- PROPOSED OVERHEAD POWERLINE
- PROPOSED HORIZONTAL DIRECTIONAL DRILLING
- PROPOSED LAYDOWN YARD
- PROPOSED LOW WATER CROSSING
- LIMIT OF DISTURBANCE
- PROPOSED CULVERT
- PROPOSED RIP RAP
- PROPOSED INDEX CONTOUR
- PROPOSED INTERVAL CONTOUR
- PROPOSED GRADING LIMITS
- PROPOSED SILT FENCE
- PROPOSED GRADE BREAK
- PROPOSED PARKING AREA
- PROPOSED ROCK CONSTRUCTION ENTRANCE
- PROPOSED HDD BORE PIT LOCATION
- PROPOSED DRAINAGE CROSSING
- PROPOSED FILTRATION BASIN

NOTES:

1. EXISTING STREAM IS BASED ON PUBLICLY AVAILABLE DATA AND SITE CONDITIONS MIGHT DIFFER FROM LOCATION SHOWN ON THE SITE PLAN.

KEY MAP

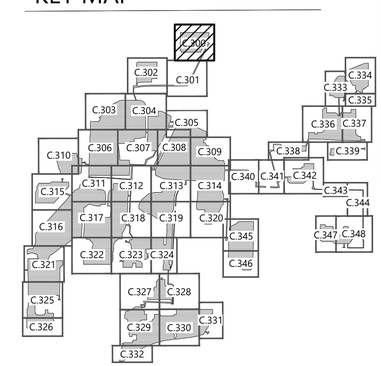

Westwood

Phone (952) 937-5150
Fax (952) 937-5822
Toll Free (888) 937-5150

12701 Whitewater Drive, Suite #300
Minnetonka, MN 55343
westwoodps.com

Westwood Development Consultants, LLC

PREPARED FOR:

NEXTera ENERGY

700 Universe Boulevard
Juno Beach, FL 33408

REVISIONS:

#	DATE	COMMENT
A	06/12/20	Issued for Review
B	09/03/20	Issued for Review

0' 100' 200' 300'

Excelsior Energy Center

Town of Byron, New York

Civil Site Plan - 1

NOT FOR CONSTRUCTION

DATE: 09/03/2020

SHEET: C.300

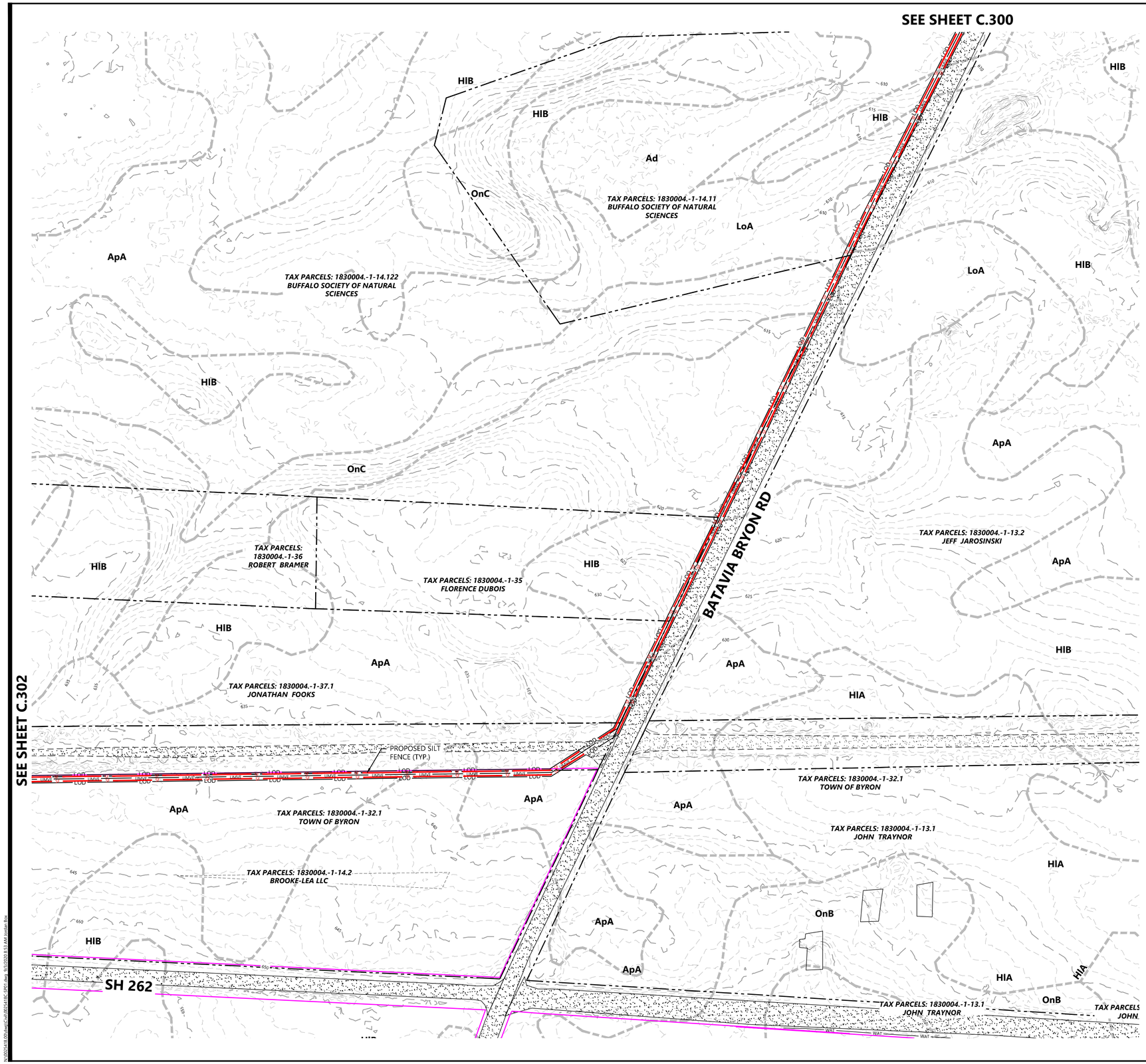

LEGEND:

- PROPERTY LINE
- PARCEL LINE
- LOT LINE
- RIGHT-OF-WAY LINES
- EASEMENT LINES
- EX. STREAM
- EX. EDGE OF WATER
- EX. TREELINE
- EX. WETLAND
- EX. SOILS
- POH — EX. OVERHEAD POWER
- EX. POWER POLE
- PUG — EX. UNDERGROUND POWER
- GAS — EX. GAS
- OIL — EX. OIL PIPELINE
- EX. GRAVEL ROAD
- EX. PAVED ROAD
- 900 — EX. INDEX CONTOUR
- EX. INTERVAL CONTOUR
- X — EX. FENCE
- WAT — EX. WATER LINE
- EX. CULVERT
- EX. STRUCTURE
- FLOW ARROW
- PROPOSED SOLAR ARRAY
- PROPOSED BUILDABLE AREA
- ###' SETBACK — PROPOSED SETBACK LINE
- PROPOSED INVERTER
- PROPOSED BATTERY PACK
- PROPOSED ACCESS ROAD
- X — PROPOSED SECURITY FENCE
- UMV — PROPOSED UNDERGROUND COLLECTOR
- OMV — PROPOSED OVERHEAD POWERLINE
- HDD — PROPOSED HORIZONTAL DIRECTIONAL DRILLING
- PROPOSED LAYDOWN YARD
- PROPOSED LOW WATER CROSSING
- LOD — LIMIT OF DISTURBANCE
- PROPOSED CULVERT
- PROPOSED RIP RAP
- 900 — PROPOSED INDEX CONTOUR
- PROPOSED INTERVAL CONTOUR
- GL — PROPOSED GRADING LIMITS
- SF — PROPOSED SILT FENCE
- PROPOSED GRADE BREAK
- PROPOSED PARKING AREA
- PROPOSED ROCK CONSTRUCTION ENTRANCE
- PROPOSED HDD BORE PIT LOCATION
- PROPOSED DRAINAGE CROSSING
- PROPOSED FILTRATION BASIN

NOTES:

1. EXISTING STREAM IS BASED ON PUBLICLY AVAILABLE DATA AND SITE CONDITIONS MIGHT DIFFER FROM LOCATION SHOWN ON THE SITE PLAN.

KEY MAP

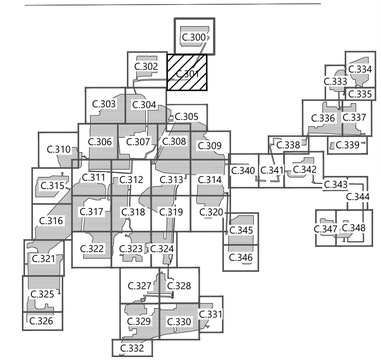

Westwood

Phone (952) 937-5150
Fax (952) 937-5822
Toll Free (888) 937-5150

12701 Whitewater Drive, Suite #300
Minnetonka, MN 55343
westwoodps.com

Westwood Development Consultants, LLC

PREPARED FOR:

NEXTera ENERGY

700 Universe Boulevard
Juno Beach, FL 33408

REVISIONS:

#	DATE	COMMENT
A	06/12/20	Issued for Review
B	09/03/20	Issued for Review

0' 100' 200' 300'

Excelsior Energy Center

Town of Byron, New York

Civil Site Plan - 2

NOT FOR CONSTRUCTION

DATE: 09/03/2020

SHEET: C.301

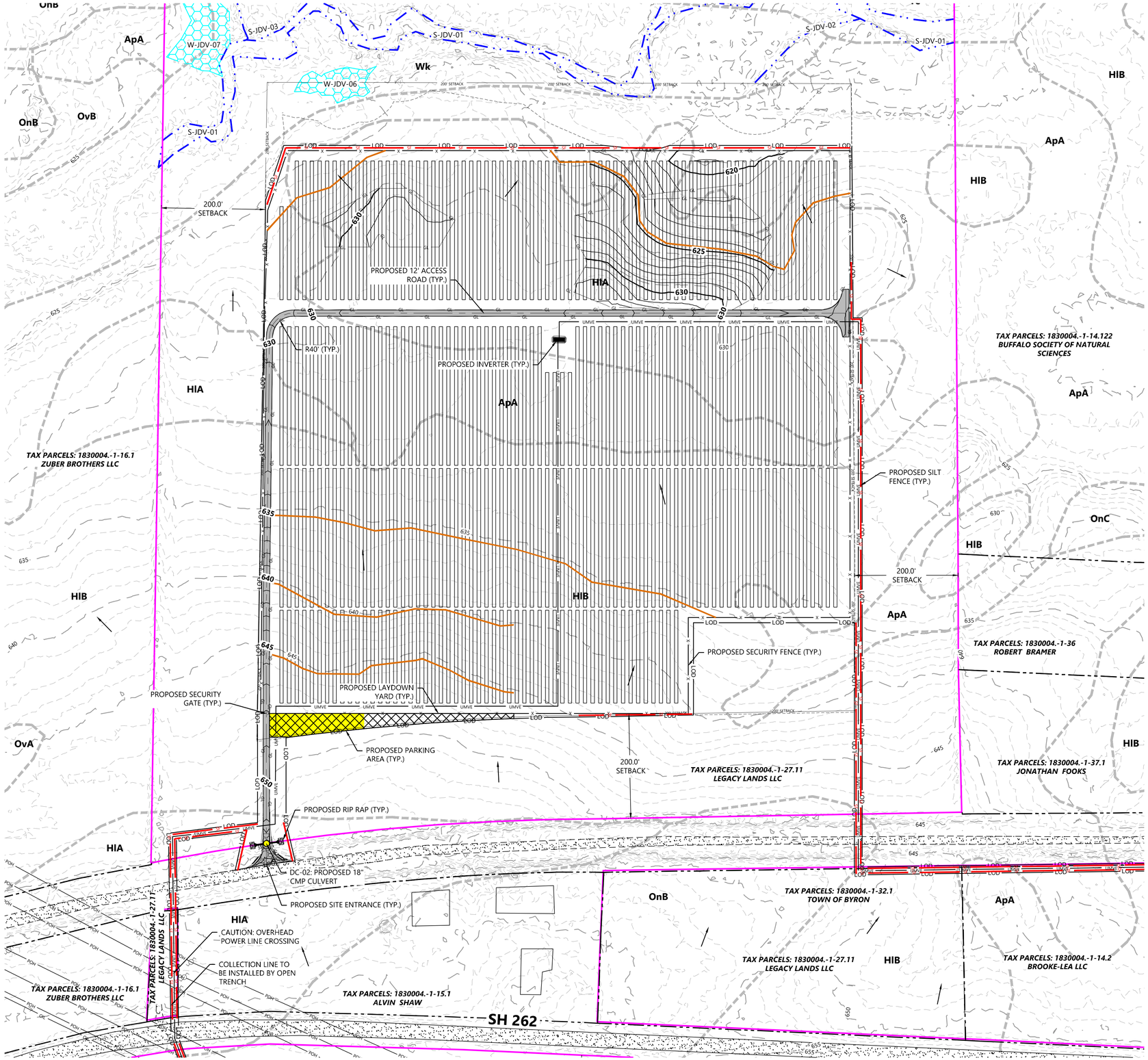

SEE SHEET C.304

LEGEND:

- PROPERTY LINE
- PARCEL LINE
- LOT LINE
- RIGHT-OF-WAY LINES
- EASEMENT LINES
- EX. STREAM
- EX. EDGE OF WATER
- EX. TREELINE
- EX. WETLAND
- EX. SOILS
- EX. OVERHEAD POWER
- EX. POWER POLE
- EX. UNDERGROUND POWER
- EX. GAS
- EX. OIL PIPELINE
- EX. GRAVEL ROAD
- EX. PAVED ROAD
- EX. INDEX CONTOUR
- EX. INTERVAL CONTOUR
- EX. FENCE
- EX. WATER LINE
- EX. CULVERT
- EX. STRUCTURE
- FLOW ARROW
- PROPOSED SOLAR ARRAY
- PROPOSED BUILDABLE AREA
- PROPOSED SETBACK LINE
- PROPOSED INVERTER
- PROPOSED BATTERY PACK
- PROPOSED ACCESS ROAD
- PROPOSED SECURITY FENCE
- PROPOSED UNDERGROUND COLLECTOR
- PROPOSED OVERHEAD POWERLINE
- PROPOSED HORIZONTAL DIRECTIONAL DRILLING
- PROPOSED LAYDOWN YARD
- PROPOSED LOW WATER CROSSING
- LIMIT OF DISTURBANCE
- PROPOSED CULVERT
- PROPOSED RIP RAP
- PROPOSED INDEX CONTOUR
- PROPOSED INTERVAL CONTOUR
- PROPOSED GRADING LIMITS
- PROPOSED SILT FENCE
- PROPOSED GRADE BREAK
- PROPOSED PARKING AREA
- PROPOSED ROCK CONSTRUCTION ENTRANCE
- PROPOSED HDD BORE PIT LOCATION
- PROPOSED DRAINAGE CROSSING
- PROPOSED FILTRATION BASIN

NOTES:

1. EXISTING STREAM IS BASED ON PUBLICLY AVAILABLE DATA AND SITE CONDITIONS MIGHT DIFFER FROM LOCATION SHOWN ON THE SITE PLAN.

KEY MAP

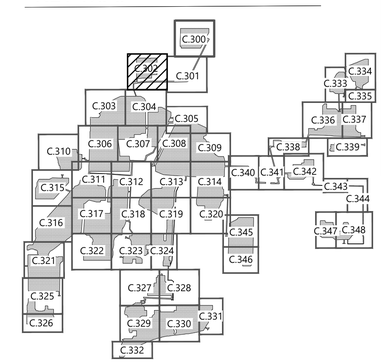

Westwood

Phone (952) 937-5150
Fax (952) 937-5822
Toll Free (888) 937-5150

12701 Whitewater Drive, Suite #300
Minnetonka, MN 55343
westwoodps.com

Westwood Development Consultants, LLC

PREPARED FOR:

NEXTera ENERGY

700 Universe Boulevard
Juno Beach, FL 33408

REVISIONS:

#	DATE	COMMENT
A	06/12/20	Issued for Review
B	09/03/20	Issued for Review

0' 100' 200' 300'

Excelsior Energy Center

Town of Byron, New York

Civil Site Plan - 3

NOT FOR CONSTRUCTION

DATE: 09/03/2020

SHEET: C.302

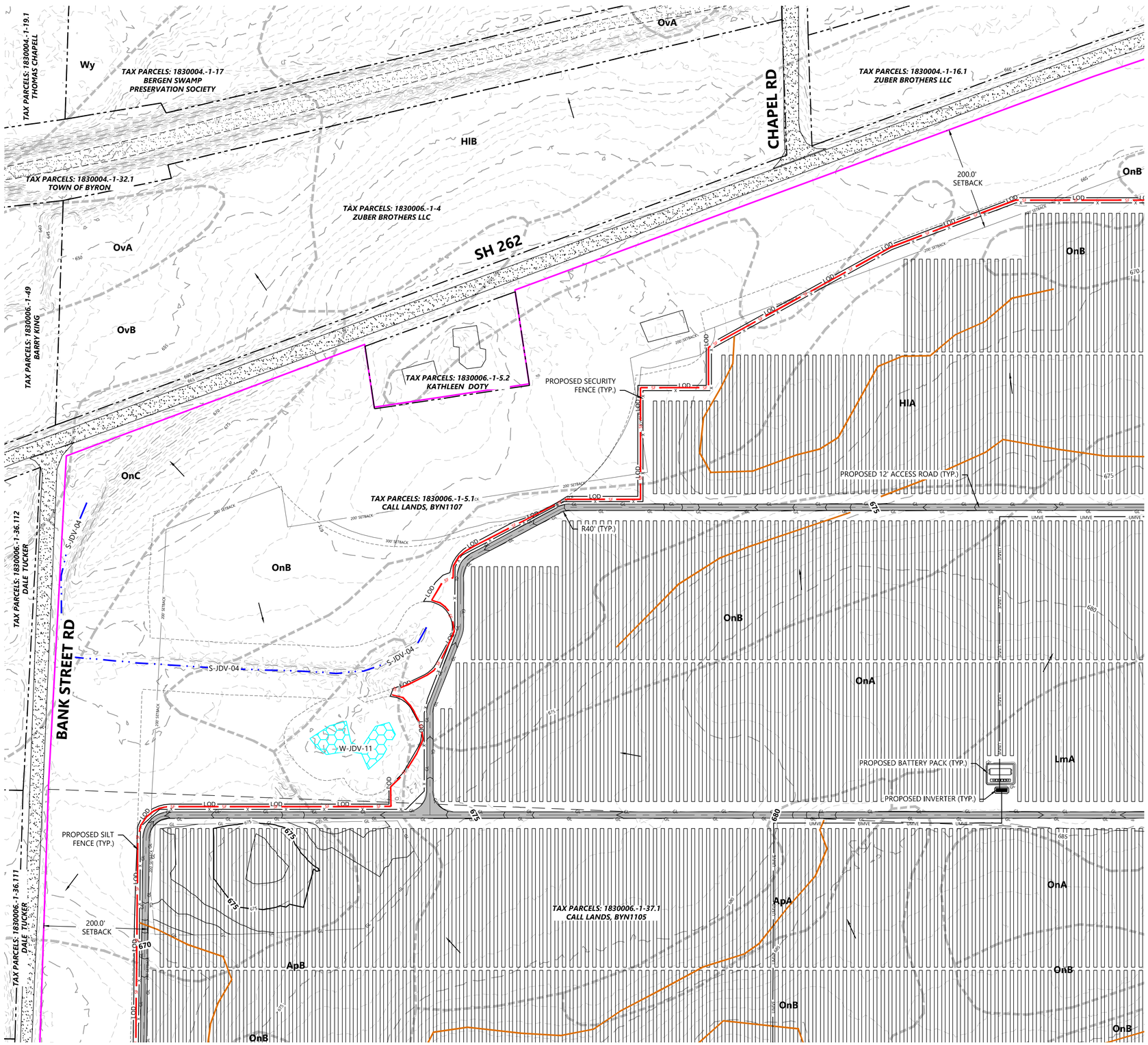

LEGEND:

- PROPERTY LINE
- PARCEL LINE
- LOT LINE
- RIGHT-OF-WAY LINES
- EASEMENT LINES
- EX. STREAM
- EX. EDGE OF WATER
- EX. TREELINE
- EX. WETLAND
- EX. SOILS
- POH — EX. OVERHEAD POWER
- EX. POWER POLE
- PUG — EX. UNDERGROUND POWER
- GAS — EX. GAS
- OIL — EX. OIL PIPELINE
- EX. GRAVEL ROAD
- EX. PAVED ROAD
- 900 — EX. INDEX CONTOUR
- EX. INTERVAL CONTOUR
- X — EX. FENCE
- WAT — EX. WATER LINE
- EX. CULVERT
- EX. STRUCTURE
- FLOW ARROW
- PROPOSED SOLAR ARRAY
- PROPOSED BUILDABLE AREA
- ### SETBACK — PROPOSED SETBACK LINE
- PROPOSED INVERTER
- PROPOSED BATTERY PACK
- PROPOSED ACCESS ROAD
- X — PROPOSED SECURITY FENCE
- UMV — PROPOSED UNDERGROUND COLLECTOR
- OMV — PROPOSED OVERHEAD POWERLINE
- HDD — PROPOSED HORIZONTAL DIRECTIONAL DRILLING
- PROPOSED LAYDOWN YARD
- PROPOSED LOW WATER CROSSING
- LOD — LIMIT OF DISTURBANCE
- PROPOSED CULVERT
- PROPOSED RIP RAP
- 900 — PROPOSED INDEX CONTOUR
- PROPOSED INTERVAL CONTOUR
- GL — PROPOSED GRADING LIMITS
- SF — PROPOSED SILT FENCE
- PROPOSED GRADE BREAK
- PROPOSED PARKING AREA
- PROPOSED ROCK CONSTRUCTION ENTRANCE
- PROPOSED HDD BORE PIT LOCATION
- PROPOSED DRAINAGE CROSSING
- PROPOSED FILTRATION BASIN

NOTES:

1. EXISTING STREAM IS BASED ON PUBLICLY AVAILABLE DATA AND SITE CONDITIONS MIGHT DIFFER FROM LOCATION SHOWN ON THE SITE PLAN.

KEY MAP

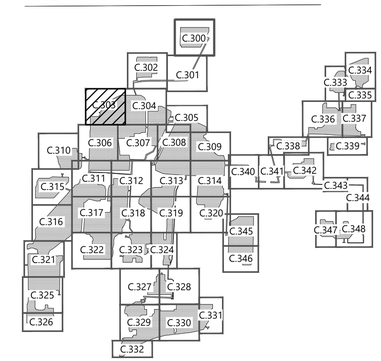

Westwood

Phone (952) 937-5150
Fax (952) 937-5822
Toll Free (888) 937-5150

12701 Whitewater Drive, Suite #300
Minnetonka, MN 55343
westwoodps.com

Westwood Development Consultants, LLC

PREPARED FOR:

NEXTera ENERGY

700 Universe Boulevard
Juno Beach, FL 33408

REVISIONS:

#	DATE	COMMENT
A	06/12/20	Issued for Review
B	09/03/20	Issued for Review

0' 100' 200' 300'

Excelsior Energy Center

Town of Byron, New York

Civil Site Plan - 4

NOT FOR CONSTRUCTION

DATE: 09/03/2020

SHEET: C.303

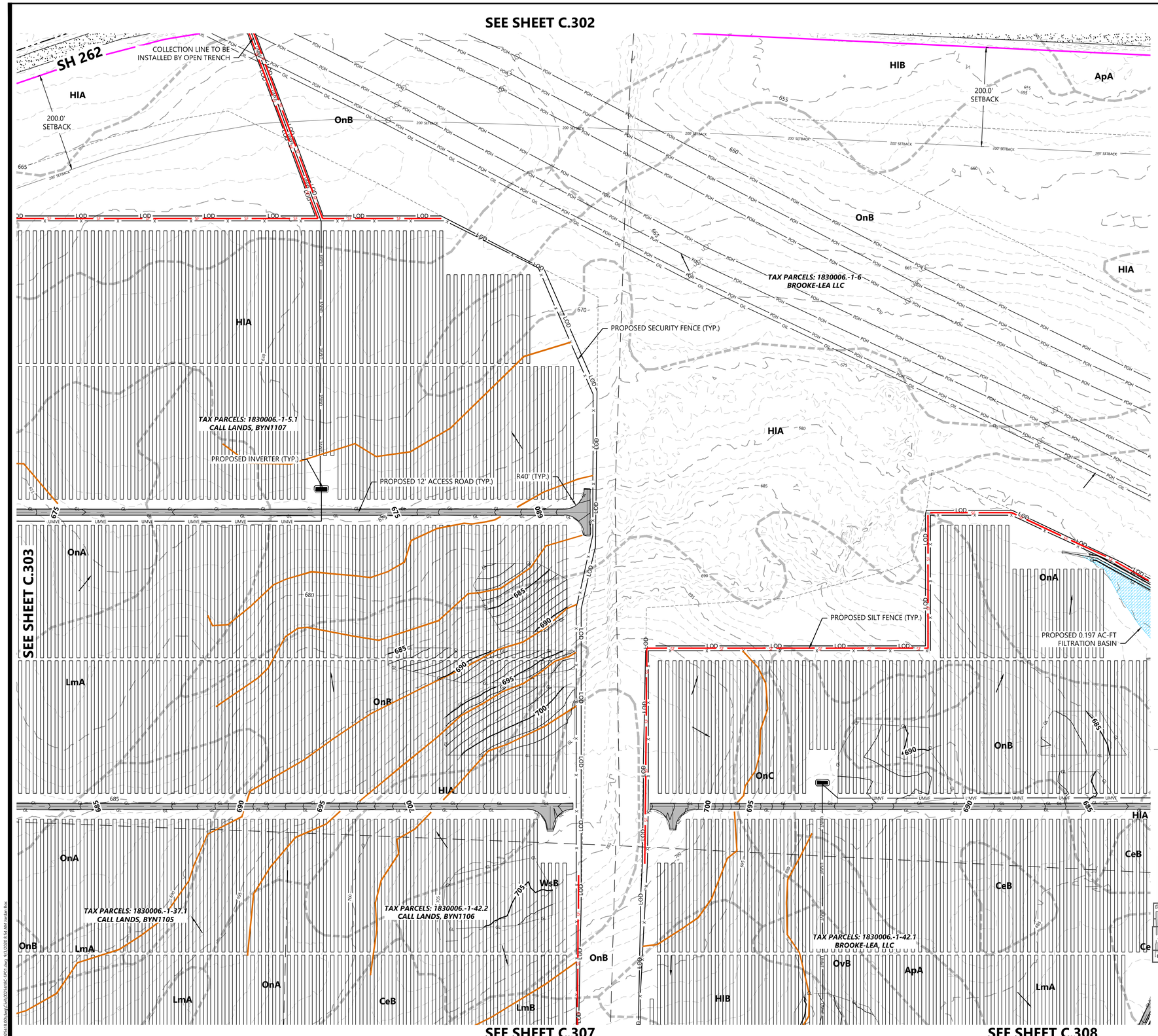

LEGEND:

- PROPERTY LINE
- PARCEL LINE
- LOT LINE
- RIGHT-OF-WAY LINES
- EASEMENT LINES
- EX. STREAM
- EX. EDGE OF WATER
- EX. TREELINE
- EX. WETLAND
- EX. SOILS
- POH — EX. OVERHEAD POWER
- EX. POWER POLE
- PUG — EX. UNDERGROUND POWER
- GAS — EX. GAS
- OIL — EX. OIL PIPELINE
- EX. GRAVEL ROAD
- EX. PAVED ROAD
- 900 — EX. INDEX CONTOUR
- EX. INTERVAL CONTOUR
- X — EX. FENCE
- WAT — EX. WATER LINE
- EX. CULVERT
- EX. STRUCTURE
- FLOW ARROW
- PROPOSED SOLAR ARRAY
- PROPOSED BUILDABLE AREA
- ###' SETBACK — PROPOSED SETBACK LINE
- PROPOSED INVERTER
- PROPOSED BATTERY PACK
- PROPOSED ACCESS ROAD
- X — PROPOSED SECURITY FENCE
- UMV — PROPOSED UNDERGROUND COLLECTOR
- OMV — PROPOSED OVERHEAD POWERLINE
- HDD — PROPOSED HORIZONTAL DIRECTIONAL DRILLING
- PROPOSED LAYDOWN YARD
- PROPOSED LOW WATER CROSSING
- LOD — LIMIT OF DISTURBANCE
- PROPOSED CULVERT
- PROPOSED RIP RAP
- 900 — PROPOSED INDEX CONTOUR
- PROPOSED INTERVAL CONTOUR
- GL — PROPOSED GRADING LIMITS
- SF — PROPOSED SILT FENCE
- PROPOSED GRADE BREAK
- PROPOSED PARKING AREA
- PROPOSED ROCK CONSTRUCTION ENTRANCE
- PROPOSED HDD BORE PIT LOCATION
- PROPOSED DRAINAGE CROSSING
- PROPOSED FILTRATION BASIN

NOTES:

1. EXISTING STREAM IS BASED ON PUBLICLY AVAILABLE DATA AND SITE CONDITIONS MIGHT DIFFER FROM LOCATION SHOWN ON THE SITE PLAN.

KEY MAP

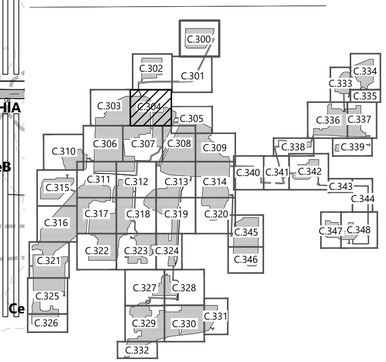

Westwood

Phone (952) 937-5150
Fax (952) 937-5822
Toll Free (888) 937-5150

12701 Whitewater Drive, Suite #300
Minnetonka, MN 55343
westwoodps.com

Westwood Development Consultants, LLC

PREPARED FOR:

NEXTera ENERGY

700 Universe Boulevard
Juno Beach, FL 33408

REVISIONS:

#	DATE	COMMENT
A	06/12/20	Issued for Review
B	09/03/20	Issued for Review

0' 100' 200' 300'

Excelsior Energy Center

Town of Byron, New York

Civil Site Plan - 5

NOT FOR CONSTRUCTION

DATE: 09/03/2020

SHEET: C.304

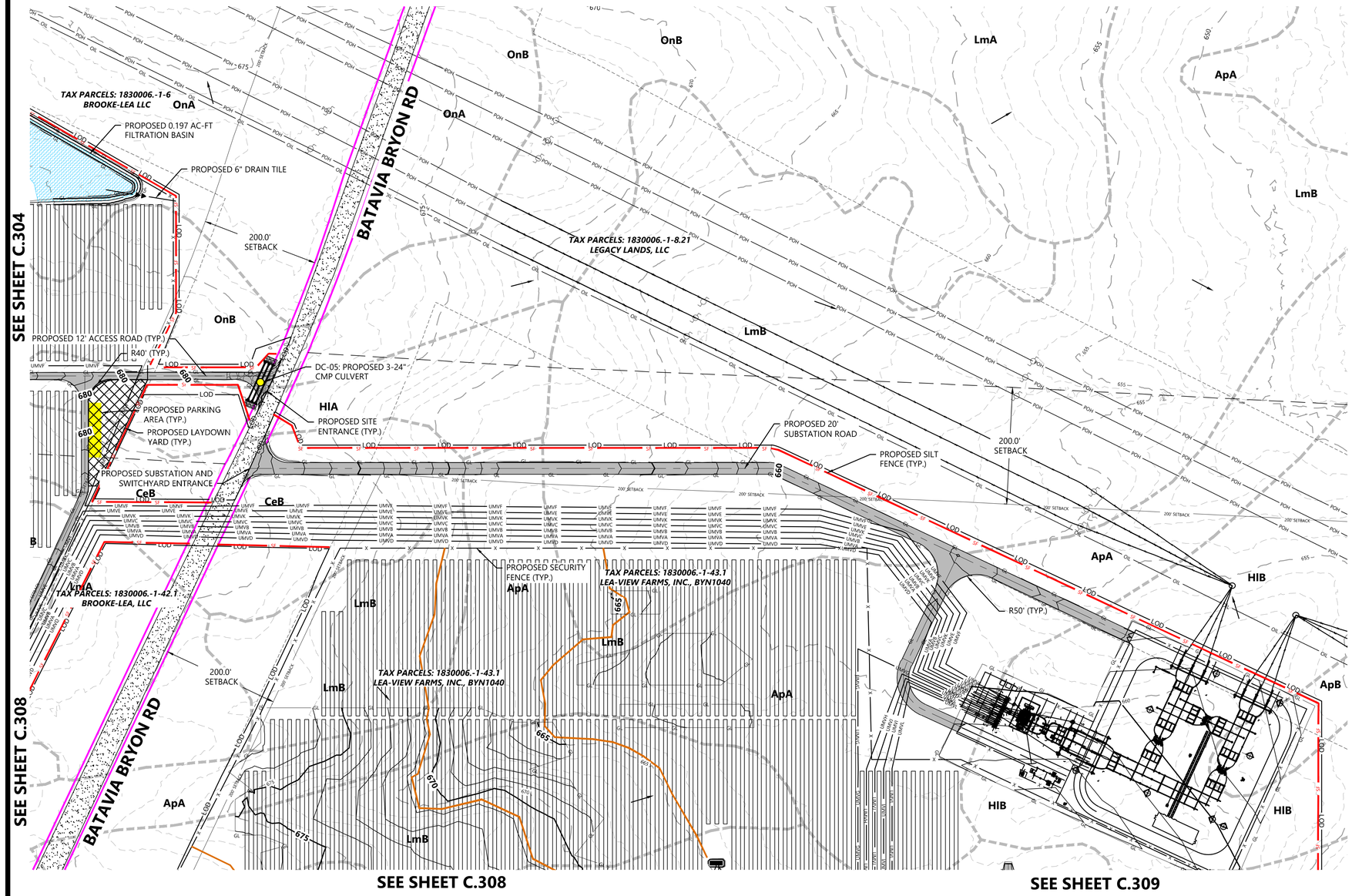

LEGEND:

- PROPERTY LINE
- PARCEL LINE
- LOT LINE
- RIGHT-OF-WAY LINES
- EASEMENT LINES
- EX. STREAM
- EX. EDGE OF WATER
- EX. TREELINE
- EX. WETLAND
- EX. SOILS
- EX. OVERHEAD POWER
- EX. POWER POLE
- EX. UNDERGROUND POWER
- EX. GAS
- EX. OIL PIPELINE
- EX. GRAVEL ROAD
- EX. PAVED ROAD
- EX. INDEX CONTOUR
- EX. INTERVAL CONTOUR
- EX. FENCE
- EX. WATER LINE
- EX. CULVERT
- EX. STRUCTURE
- FLOW ARROW
- PROPOSED SOLAR ARRAY
- PROPOSED BUILDABLE AREA
- PROPOSED SETBACK LINE
- PROPOSED INVERTER
- PROPOSED BATTERY PACK
- PROPOSED ACCESS ROAD
- PROPOSED SECURITY FENCE
- PROPOSED UNDERGROUND COLLECTOR
- PROPOSED OVERHEAD POWERLINE
- PROPOSED HORIZONTAL DIRECTIONAL DRILLING
- PROPOSED LAYDOWN YARD
- PROPOSED LOW WATER CROSSING
- LIMIT OF DISTURBANCE
- PROPOSED CULVERT
- PROPOSED RIP RAP
- PROPOSED INDEX CONTOUR
- PROPOSED INTERVAL CONTOUR
- PROPOSED GRADING LIMITS
- PROPOSED SILT FENCE
- PROPOSED GRADE BREAK
- PROPOSED PARKING AREA
- PROPOSED ROCK CONSTRUCTION ENTRANCE
- PROPOSED HDD BORE PIT LOCATION
- PROPOSED DRAINAGE CROSSING
- PROPOSED FILTRATION BASIN

NOTES:

1. EXISTING STREAM IS BASED ON PUBLICLY AVAILABLE DATA AND SITE CONDITIONS MIGHT DIFFER FROM LOCATION SHOWN ON THE SITE PLAN.

Westwood

Phone (952) 937-5150
Fax (952) 937-5822
Tol Free (888) 937-5150

12701 Whitewater Drive, Suite #300
Minnetonka, MN 55343
westwoodps.com

Westwood Development Consultants, LLC

PREPARED FOR:

NEXTera ENERGY

700 Universe Boulevard
Juno Beach, FL 33408

REVISIONS:

#	DATE	COMMENT
A	06/12/20	Issued for Review
B	09/03/20	Issued for Review

0' 100' 200' 300'

KEY MAP

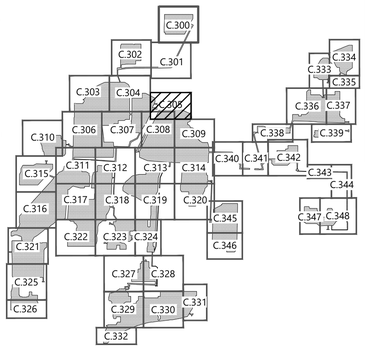

Excelsior Energy Center

Town of Byron, New York

Civil Site Plan - 6

NOT FOR CONSTRUCTION

DATE: 09/03/2020

SHEET: C.305

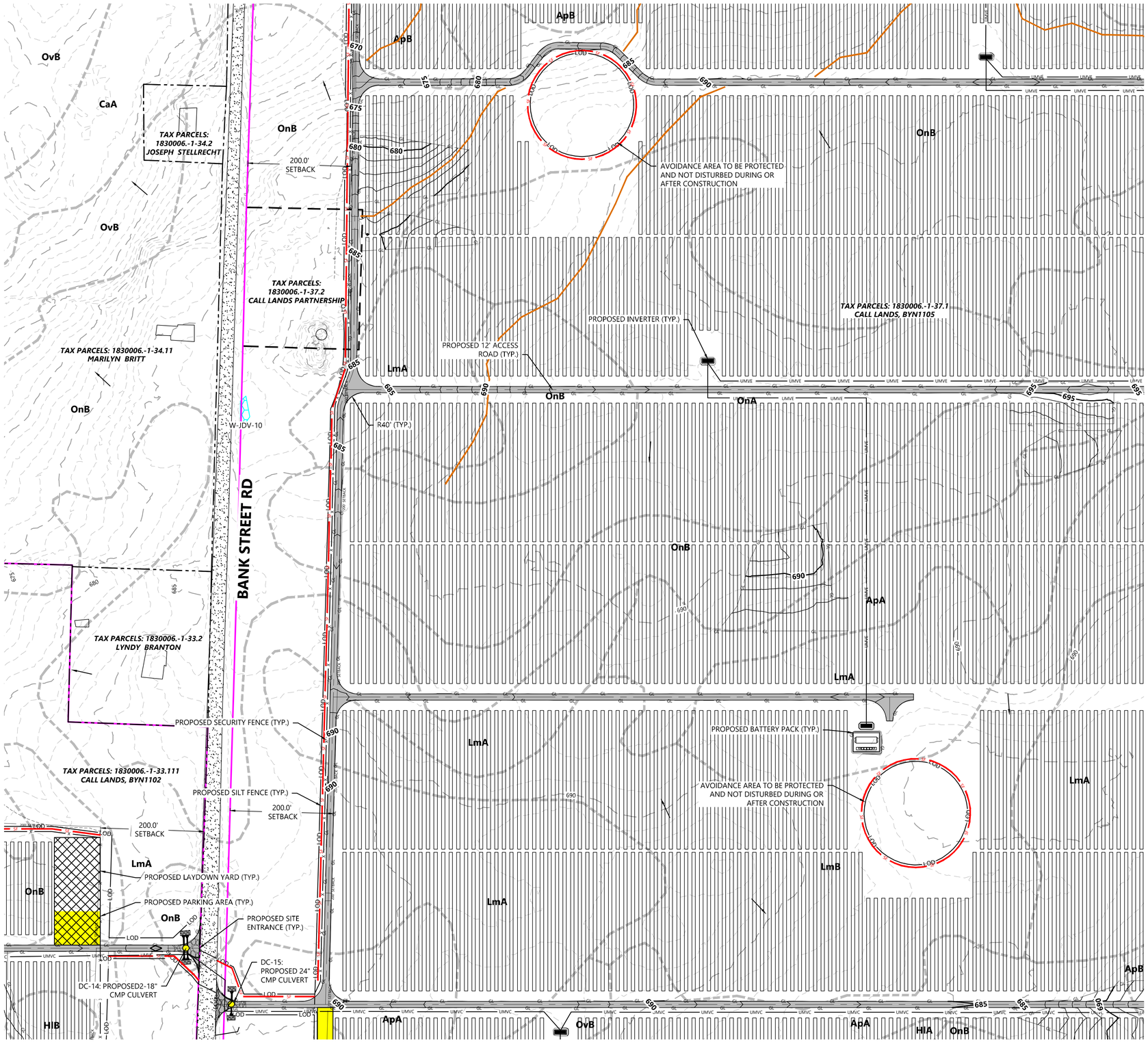

LEGEND:

- PROPERTY LINE
- PARCEL LINE
- LOT LINE
- RIGHT-OF-WAY LINES
- EASEMENT LINES
- EX. STREAM
- EX. EDGE OF WATER
- EX. TREELINE
- EX. WETLAND
- EX. SOILS
- EX. OVERHEAD POWER
- EX. POWER POLE
- EX. UNDERGROUND POWER
- EX. GAS
- EX. OIL PIPELINE
- EX. GRAVEL ROAD
- EX. PAVED ROAD
- EX. INDEX CONTOUR
- EX. INTERVAL CONTOUR
- EX. FENCE
- EX. WATER LINE
- EX. CULVERT
- EX. STRUCTURE
- FLOW ARROW
- PROPOSED SOLAR ARRAY
- PROPOSED BUILDABLE AREA
- PROPOSED SETBACK LINE
- PROPOSED INVERTER
- PROPOSED BATTERY PACK
- PROPOSED ACCESS ROAD
- PROPOSED SECURITY FENCE
- PROPOSED UNDERGROUND COLLECTOR
- PROPOSED OVERHEAD POWERLINE
- PROPOSED HORIZONTAL DIRECTIONAL DRILLING
- PROPOSED LAYDOWN YARD
- PROPOSED LOW WATER CROSSING
- LIMIT OF DISTURBANCE
- PROPOSED CULVERT
- PROPOSED RIP RAP
- PROPOSED INDEX CONTOUR
- PROPOSED INTERVAL CONTOUR
- PROPOSED GRADING LIMITS
- PROPOSED SILT FENCE
- PROPOSED GRADE BREAK
- PROPOSED PARKING AREA
- PROPOSED ROCK CONSTRUCTION ENTRANCE
- PROPOSED HDD BORE PIT LOCATION
- PROPOSED DRAINAGE CROSSING
- PROPOSED FILTRATION BASIN

NOTES:

1. EXISTING STREAM IS BASED ON PUBLICLY AVAILABLE DATA AND SITE CONDITIONS MIGHT DIFFER FROM LOCATION SHOWN ON THE SITE PLAN.

KEY MAP

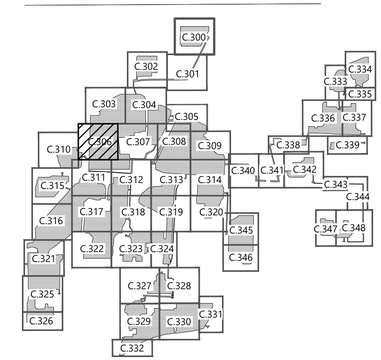

Westwood

Phone (952) 937-5150
Fax (952) 937-5822
Toll Free (888) 937-5150

12701 Whitewater Drive, Suite #300
Minnetonka, MN 55343
westwoodps.com

Westwood Development Consultants, LLC

PREPARED FOR:

NEXTera ENERGY

700 Universe Boulevard
Juno Beach, FL 33408

REVISIONS:

#	DATE	COMMENT
A	06/12/20	Issued for Review
B	09/03/20	Issued for Review

0' 100' 200' 300'

Excelsior Energy Center

Town of Byron, New York

Civil Site Plan - 7

NOT FOR CONSTRUCTION

DATE: 09/03/2020

SHEET: C.306

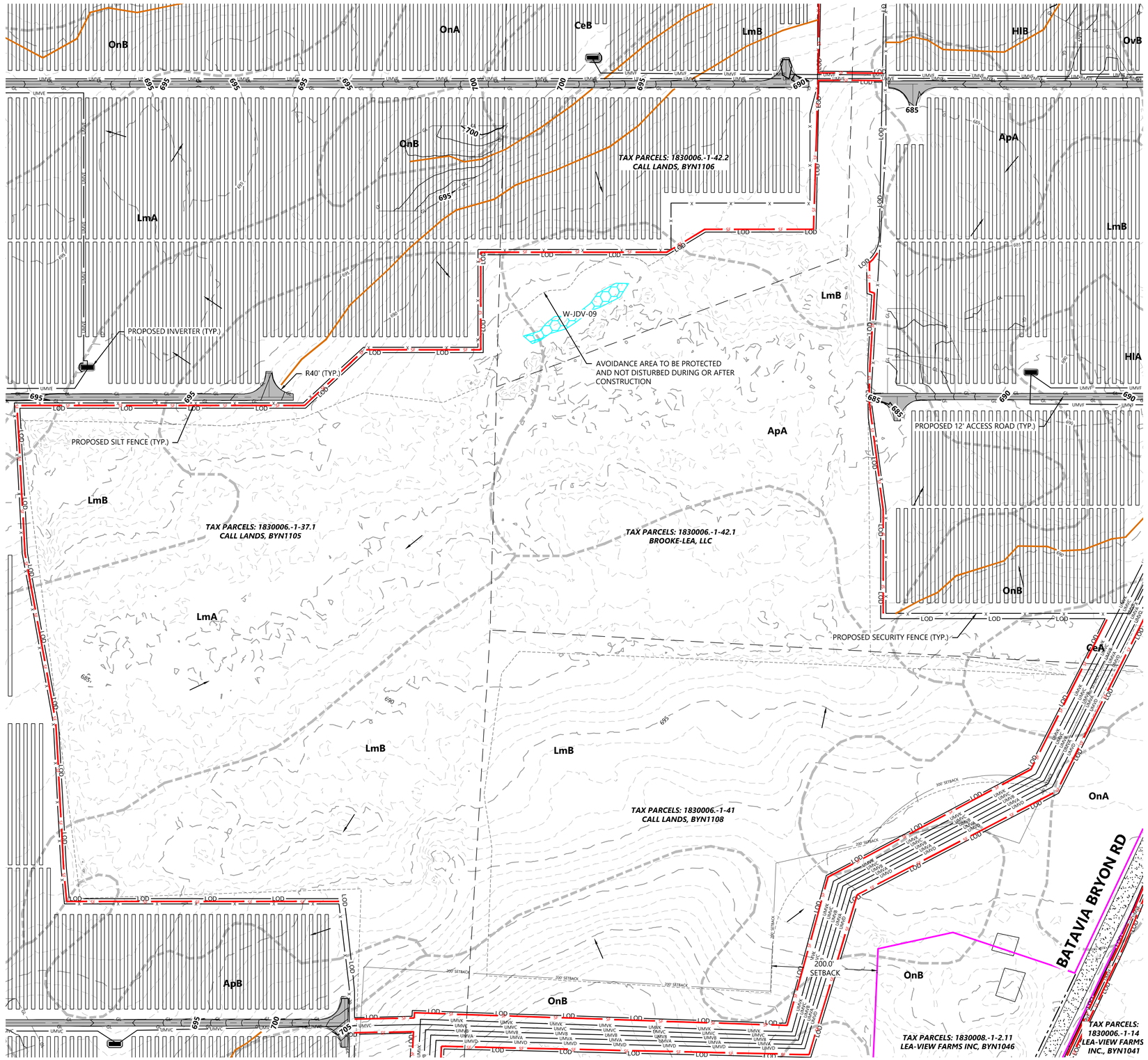

LEGEND:

- PROPERTY LINE
- PARCEL LINE
- LOT LINE
- RIGHT-OF-WAY LINES
- EASEMENT LINES
- EX. STREAM
- EX. EDGE OF WATER
- EX. TREELINE
- EX. WETLAND
- EX. SOILS
- EX. OVERHEAD POWER
- EX. POWER POLE
- EX. UNDERGROUND POWER
- EX. GAS
- EX. OIL PIPELINE
- EX. GRAVEL ROAD
- EX. PAVED ROAD
- EX. INDEX CONTOUR
- EX. INTERVAL CONTOUR
- EX. FENCE
- EX. WATER LINE
- EX. CULVERT
- EX. STRUCTURE
- FLOW ARROW
- PROPOSED SOLAR ARRAY
- PROPOSED BUILDABLE AREA
- PROPOSED SETBACK LINE
- PROPOSED INVERTER
- PROPOSED BATTERY PACK
- PROPOSED ACCESS ROAD
- PROPOSED SECURITY FENCE
- PROPOSED UNDERGROUND COLLECTOR
- PROPOSED OVERHEAD POWERLINE
- PROPOSED HORIZONTAL DIRECTIONAL DRILLING
- PROPOSED LAYDOWN YARD
- PROPOSED LOW WATER CROSSING
- LIMIT OF DISTURBANCE
- PROPOSED CULVERT
- PROPOSED RIP RAP
- PROPOSED INDEX CONTOUR
- PROPOSED INTERVAL CONTOUR
- PROPOSED GRADING LIMITS
- PROPOSED SILT FENCE
- PROPOSED GRADE BREAK
- PROPOSED PARKING AREA
- PROPOSED ROCK CONSTRUCTION ENTRANCE
- PROPOSED HDD BORE PIT LOCATION
- PROPOSED DRAINAGE CROSSING
- PROPOSED FILTRATION BASIN

NOTES:

1. EXISTING STREAM IS BASED ON PUBLICLY AVAILABLE DATA AND SITE CONDITIONS MIGHT DIFFER FROM LOCATION SHOWN ON THE SITE PLAN.

KEY MAP

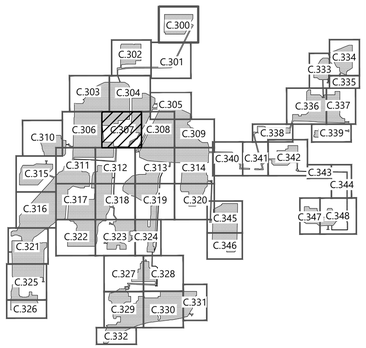

Westwood

Phone (952) 937-5150
Fax (952) 937-5822
Toll Free (888) 937-5150

12701 Whitewater Drive, Suite #300
Minnetonka, MN 55343
westwoodps.com

Westwood Development Consultants, LLC

PREPARED FOR:

NEXTera ENERGY

700 Universe Boulevard
Juno Beach, FL 33408

REVISIONS:

#	DATE	COMMENT
A	06/12/20	Issued for Review
B	09/03/20	Issued for Review

0' 100' 200' 300'

Excelsior Energy Center

Town of Byron, New York

Civil Site Plan - 8

NOT FOR CONSTRUCTION

DATE: 09/03/2020

SHEET: C.307

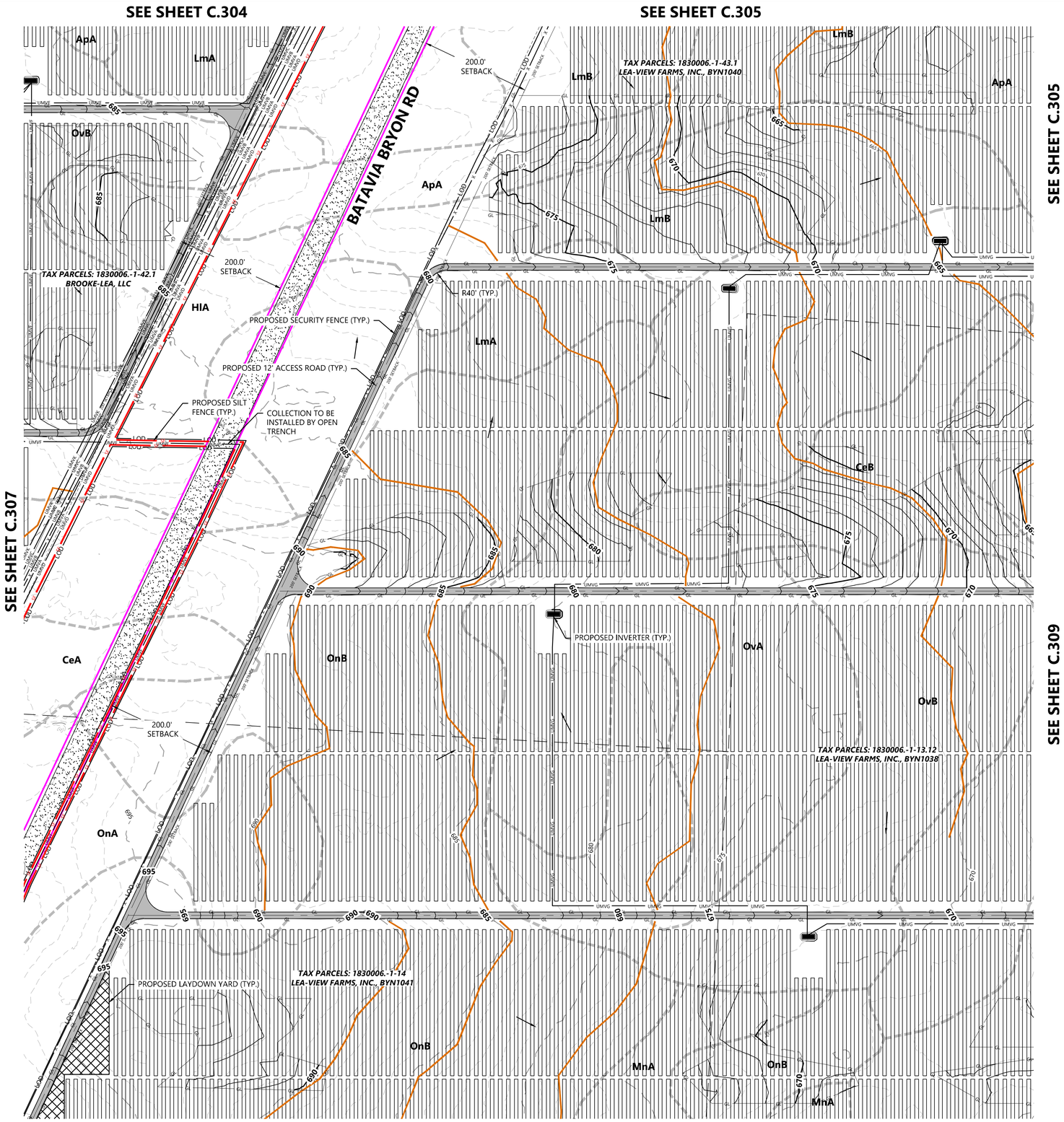

LEGEND:

- PROPERTY LINE
- PARCEL LINE
- LOT LINE
- RIGHT-OF-WAY LINES
- EASEMENT LINES
- EX. STREAM
- EX. EDGE OF WATER
- EX. TREELINE
- EX. WETLAND
- EX. SOILS
- EX. OVERHEAD POWER
- EX. POWER POLE
- EX. UNDERGROUND POWER
- EX. GAS
- EX. OIL PIPELINE
- EX. GRAVEL ROAD
- EX. PAVED ROAD
- EX. INDEX CONTOUR
- EX. INTERVAL CONTOUR
- EX. FENCE
- EX. WATER LINE
- EX. CULVERT
- EX. STRUCTURE
- FLOW ARROW
- PROPOSED SOLAR ARRAY
- PROPOSED BUILDABLE AREA
- PROPOSED SETBACK LINE
- PROPOSED INVERTER
- PROPOSED BATTERY PACK
- PROPOSED ACCESS ROAD
- PROPOSED SECURITY FENCE
- PROPOSED UNDERGROUND COLLECTOR
- PROPOSED OVERHEAD POWERLINE
- PROPOSED HORIZONTAL DIRECTIONAL DRILLING
- PROPOSED LAYDOWN YARD
- PROPOSED LOW WATER CROSSING
- LIMIT OF DISTURBANCE
- PROPOSED CULVERT
- PROPOSED RIP RAP
- PROPOSED INDEX CONTOUR
- PROPOSED INTERVAL CONTOUR
- PROPOSED GRADING LIMITS
- PROPOSED SILT FENCE
- PROPOSED GRADE BREAK
- PROPOSED PARKING AREA
- PROPOSED ROCK CONSTRUCTION ENTRANCE
- PROPOSED HDD BORE PIT LOCATION
- PROPOSED DRAINAGE CROSSING
- PROPOSED FILTRATION BASIN

NOTES:

1. EXISTING STREAM IS BASED ON PUBLICLY AVAILABLE DATA AND SITE CONDITIONS MIGHT DIFFER FROM LOCATION SHOWN ON THE SITE PLAN.

KEY MAP

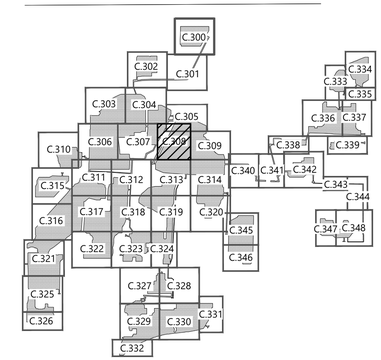

Westwood

Phone (952) 937-5150
Fax (952) 937-5822
Toll Free (888) 937-5150

12701 Whitewater Drive, Suite #300
Minnetonka, MN 55343
westwoodps.com

Westwood Development Consultants, LLC

PREPARED FOR:

NEXTera ENERGY

700 Universe Boulevard
Juno Beach, FL 33408

REVISIONS:

#	DATE	COMMENT
A	06/12/20	Issued for Review
B	09/03/20	Issued for Review

0' 100' 200' 300'

Excelsior Energy Center

Town of Byron, New York

Civil Site Plan - 9

NOT FOR CONSTRUCTION

DATE: 09/03/2020

SHEET: C.308

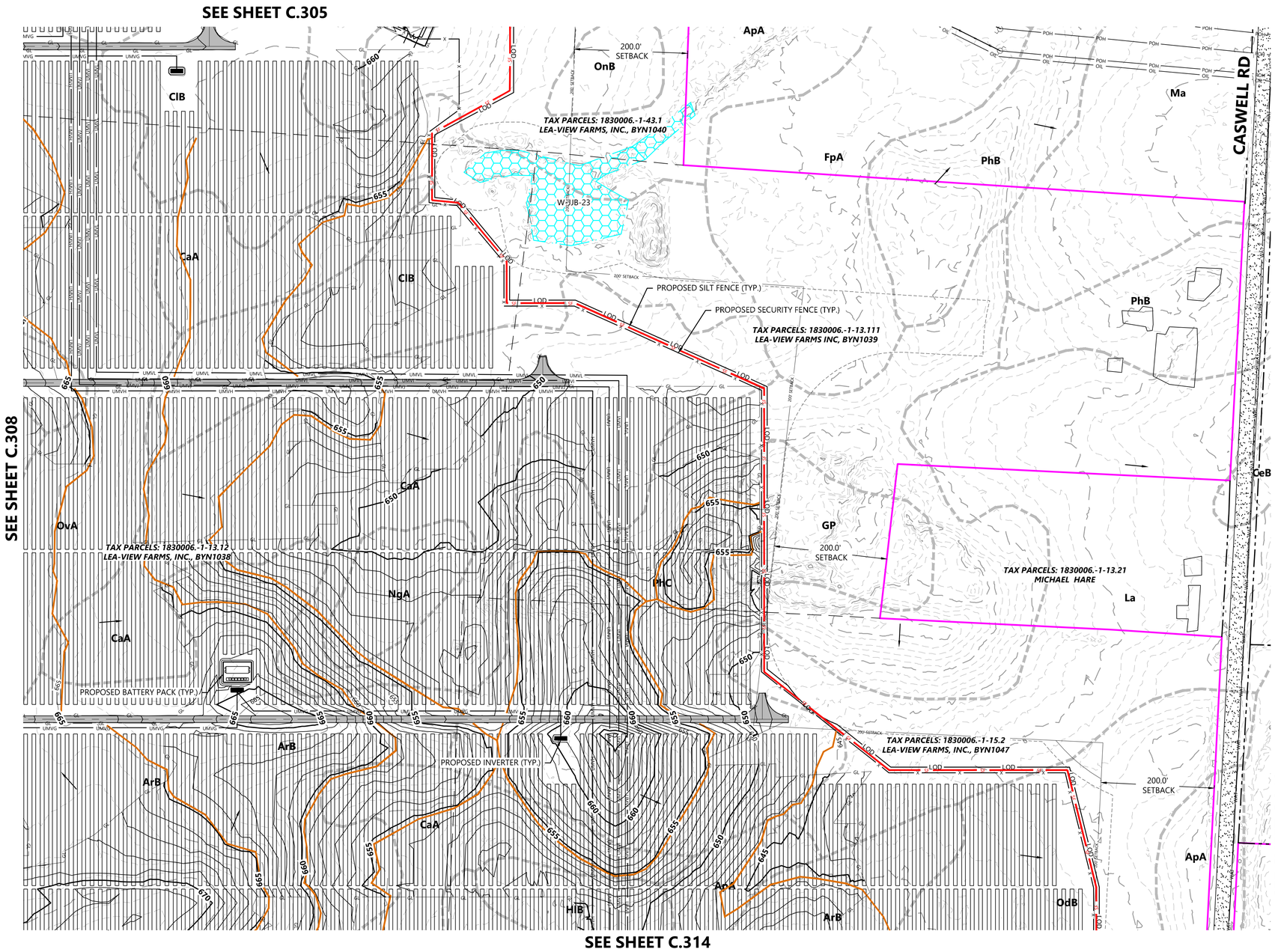

LEGEND:

- PROPERTY LINE
- PARCEL LINE
- LOT LINE
- RIGHT-OF-WAY LINES
- EASEMENT LINES
- EX. STREAM
- EX. EDGE OF WATER
- EX. TREELINE
- EX. WETLAND
- EX. SOILS
- EX. OVERHEAD POWER
- EX. POWER POLE
- EX. UNDERGROUND POWER
- EX. GAS
- EX. OIL PIPELINE
- EX. GRAVEL ROAD
- EX. PAVED ROAD
- EX. INDEX CONTOUR
- EX. INTERVAL CONTOUR
- EX. FENCE
- EX. WATER LINE
- EX. CULVERT
- EX. STRUCTURE
- FLOW ARROW
- PROPOSED SOLAR ARRAY
- PROPOSED BUILDABLE AREA
- PROPOSED SETBACK LINE
- PROPOSED INVERTER
- PROPOSED BATTERY PACK
- PROPOSED ACCESS ROAD
- PROPOSED SECURITY FENCE
- PROPOSED UNDERGROUND COLLECTOR
- PROPOSED OVERHEAD POWERLINE
- PROPOSED HORIZONTAL DIRECTIONAL DRILLING
- PROPOSED LAYDOWN YARD
- PROPOSED LOW WATER CROSSING
- LIMIT OF DISTURBANCE
- PROPOSED CULVERT
- PROPOSED RIP RAP
- PROPOSED INDEX CONTOUR
- PROPOSED INTERVAL CONTOUR
- PROPOSED GRADING LIMITS
- PROPOSED SILT FENCE
- PROPOSED GRADE BREAK
- PROPOSED PARKING AREA
- PROPOSED ROCK CONSTRUCTION ENTRANCE
- PROPOSED HDD BORE PIT LOCATION
- PROPOSED DRAINAGE CROSSING
- PROPOSED FILTRATION BASIN

NOTES:

1. EXISTING STREAM IS BASED ON PUBLICLY AVAILABLE DATA AND SITE CONDITIONS MIGHT DIFFER FROM LOCATION SHOWN ON THE SITE PLAN.

KEY MAP

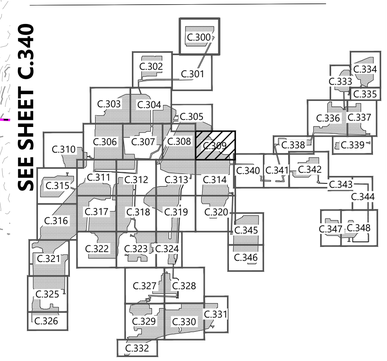

Westwood

Phone (952) 937-5150
Fax (952) 937-5822
Toll Free (888) 937-5150

12701 Whitewater Drive, Suite #300
Minnetonka, MN 55343
westwoodps.com

Westwood Development Consultants, LLC

PREPARED FOR:

NEXTera ENERGY

700 Universe Boulevard
Juno Beach, FL 33408

REVISIONS:

#	DATE	COMMENT
A	06/12/20	Issued for Review
B	09/03/20	Issued for Review

0' 100' 200' 300'

Excelsior Energy Center

Town of Byron, New York

Civil Site Plan - 10

NOT FOR CONSTRUCTION

DATE: 09/03/2020

SHEET: C.309

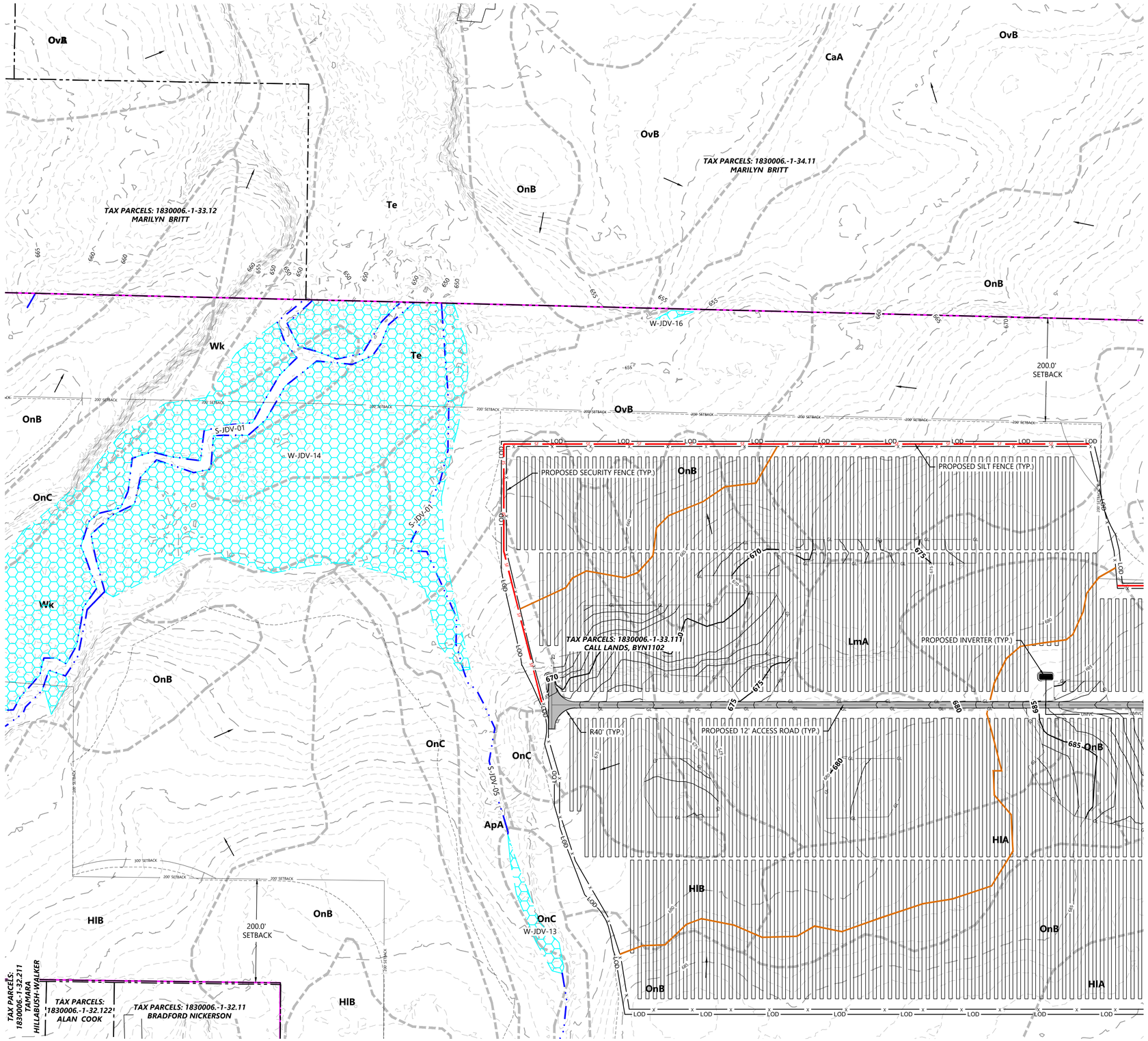

LEGEND:

- PROPERTY LINE
- PARCEL LINE
- LOT LINE
- RIGHT-OF-WAY LINES
- EASEMENT LINES
- EX. STREAM
- EX. EDGE OF WATER
- EX. TREELINE
- EX. WETLAND
- EX. SOILS
- POH — EX. OVERHEAD POWER
- EX. POWER POLE
- PUG — EX. UNDERGROUND POWER
- GAS — EX. GAS
- OIL — EX. OIL PIPELINE
- EX. GRAVEL ROAD
- EX. PAVED ROAD
- 900 — EX. INDEX CONTOUR
- EX. INTERVAL CONTOUR
- X — EX. FENCE
- WAT — EX. WATER LINE
- EX. CULVERT
- EX. STRUCTURE
- FLOW ARROW
- PROPOSED SOLAR ARRAY
- PROPOSED BUILDABLE AREA
- ###' SETBACK — PROPOSED SETBACK LINE
- PROPOSED INVERTER
- PROPOSED BATTERY PACK
- PROPOSED ACCESS ROAD
- X — PROPOSED SECURITY FENCE
- UMV — PROPOSED UNDERGROUND COLLECTOR
- OMV — PROPOSED OVERHEAD POWERLINE
- HDD — PROPOSED HORIZONTAL DIRECTIONAL DRILLING
- PROPOSED LAYDOWN YARD
- PROPOSED LOW WATER CROSSING
- LOD — LIMIT OF DISTURBANCE
- PROPOSED CULVERT
- PROPOSED RIP RAP
- 900 — PROPOSED INDEX CONTOUR
- PROPOSED INTERVAL CONTOUR
- GL — PROPOSED GRADING LIMITS
- SF — PROPOSED SILT FENCE
- PROPOSED GRADE BREAK
- PROPOSED PARKING AREA
- PROPOSED ROCK CONSTRUCTION ENTRANCE
- PROPOSED HDD BORE PIT LOCATION
- PROPOSED DRAINAGE CROSSING
- PROPOSED FILTRATION BASIN

NOTES:

1. EXISTING STREAM IS BASED ON PUBLICLY AVAILABLE DATA AND SITE CONDITIONS MIGHT DIFFER FROM LOCATION SHOWN ON THE SITE PLAN.

KEY MAP

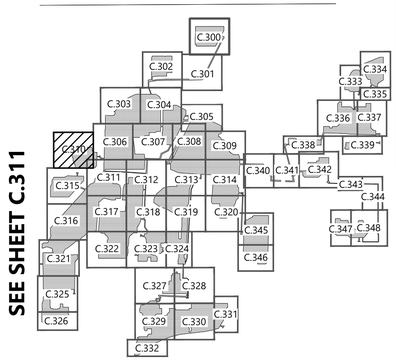

Westwood

Phone (952) 937-5150
Fax (952) 937-5822
Toll Free (888) 937-5150

12701 Whitewater Drive, Suite #300
Minnetonka, MN 55343
westwoodps.com

Westwood Development Consultants, LLC

PREPARED FOR:

NEXTera ENERGY

700 Universe Boulevard
Juno Beach, FL 33408

REVISIONS:

#	DATE	COMMENT
A	06/12/20	Issued for Review
B	09/03/20	Issued for Review

0' 100' 200' 300'

Excelsior Energy Center

Town of Byron, New York

Civil Site Plan - 11

NOT FOR CONSTRUCTION

DATE: 09/03/2020

SHEET: C.310

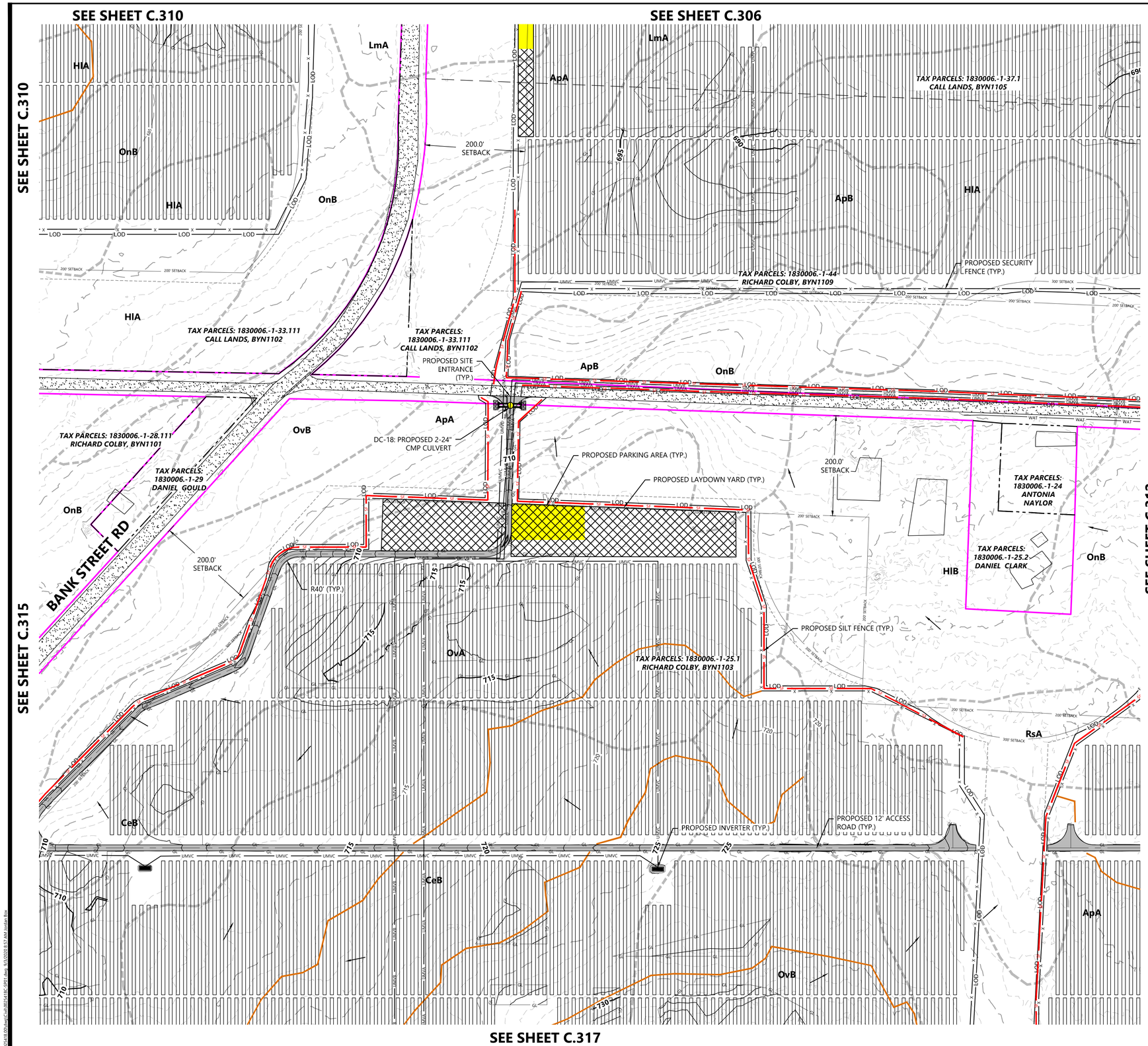

LEGEND:

- PROPERTY LINE
- PARCEL LINE
- LOT LINE
- RIGHT-OF-WAY LINES
- EASEMENT LINES
- EX. STREAM
- EX. EDGE OF WATER
- EX. TREELINE
- EX. WETLAND
- EX. SOILS
- POH — EX. OVERHEAD POWER
- EX. POWER POLE
- PUG — EX. UNDERGROUND POWER
- GAS — EX. GAS
- OIL — EX. OIL PIPELINE
- EX. GRAVEL ROAD
- EX. PAVED ROAD
- 900 — EX. INDEX CONTOUR
- EX. INTERVAL CONTOUR
- X — EX. FENCE
- WAT — EX. WATER LINE
- EX. CULVERT
- EX. STRUCTURE
- FLOW ARROW
- PROPOSED SOLAR ARRAY
- PROPOSED BUILDABLE AREA
- ###' SETBACK — PROPOSED SETBACK LINE
- PROPOSED INVERTER
- PROPOSED BATTERY PACK
- PROPOSED ACCESS ROAD
- X — PROPOSED SECURITY FENCE
- UMV — PROPOSED UNDERGROUND COLLECTOR
- OMV — PROPOSED OVERHEAD POWERLINE
- HDD — PROPOSED HORIZONTAL DIRECTIONAL DRILLING
- PROPOSED LAYDOWN YARD
- PROPOSED LOW WATER CROSSING
- LOD — LIMIT OF DISTURBANCE
- PROPOSED CULVERT
- PROPOSED RIP RAP
- 900 — PROPOSED INDEX CONTOUR
- PROPOSED INTERVAL CONTOUR
- GL — PROPOSED GRADING LIMITS
- SF — PROPOSED SILT FENCE
- PROPOSED GRADE BREAK
- PROPOSED PARKING AREA
- PROPOSED ROCK CONSTRUCTION ENTRANCE
- PROPOSED HDD BORE PIT LOCATION
- PROPOSED DRAINAGE CROSSING
- PROPOSED FILTRATION BASIN

NOTES:

1. EXISTING STREAM IS BASED ON PUBLICLY AVAILABLE DATA AND SITE CONDITIONS MIGHT DIFFER FROM LOCATION SHOWN ON THE SITE PLAN.

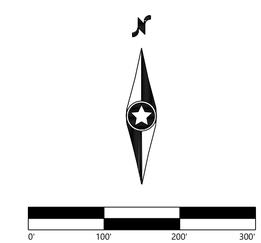

KEY MAP

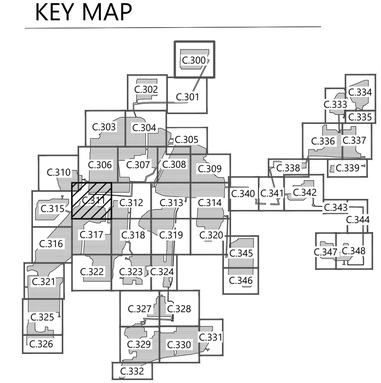

Westwood

Phone (952) 937-5150
Fax (952) 937-5822
Toll Free (888) 937-5150

12701 Whitewater Drive, Suite #300
Minnetonka, MN 55343
westwoodps.com

Westwood Development Consultants, LLC

PREPARED FOR:

NEXTera ENERGY

700 Universe Boulevard
Juno Beach, FL 33408

REVISIONS:

#	DATE	COMMENT
A	06/12/20	Issued for Review
B	09/03/20	Issued for Review

Excelsior Energy Center

Town of Byron, New York

Civil Site Plan - 12

NOT FOR CONSTRUCTION

DATE: 09/03/2020

SHEET: C.311

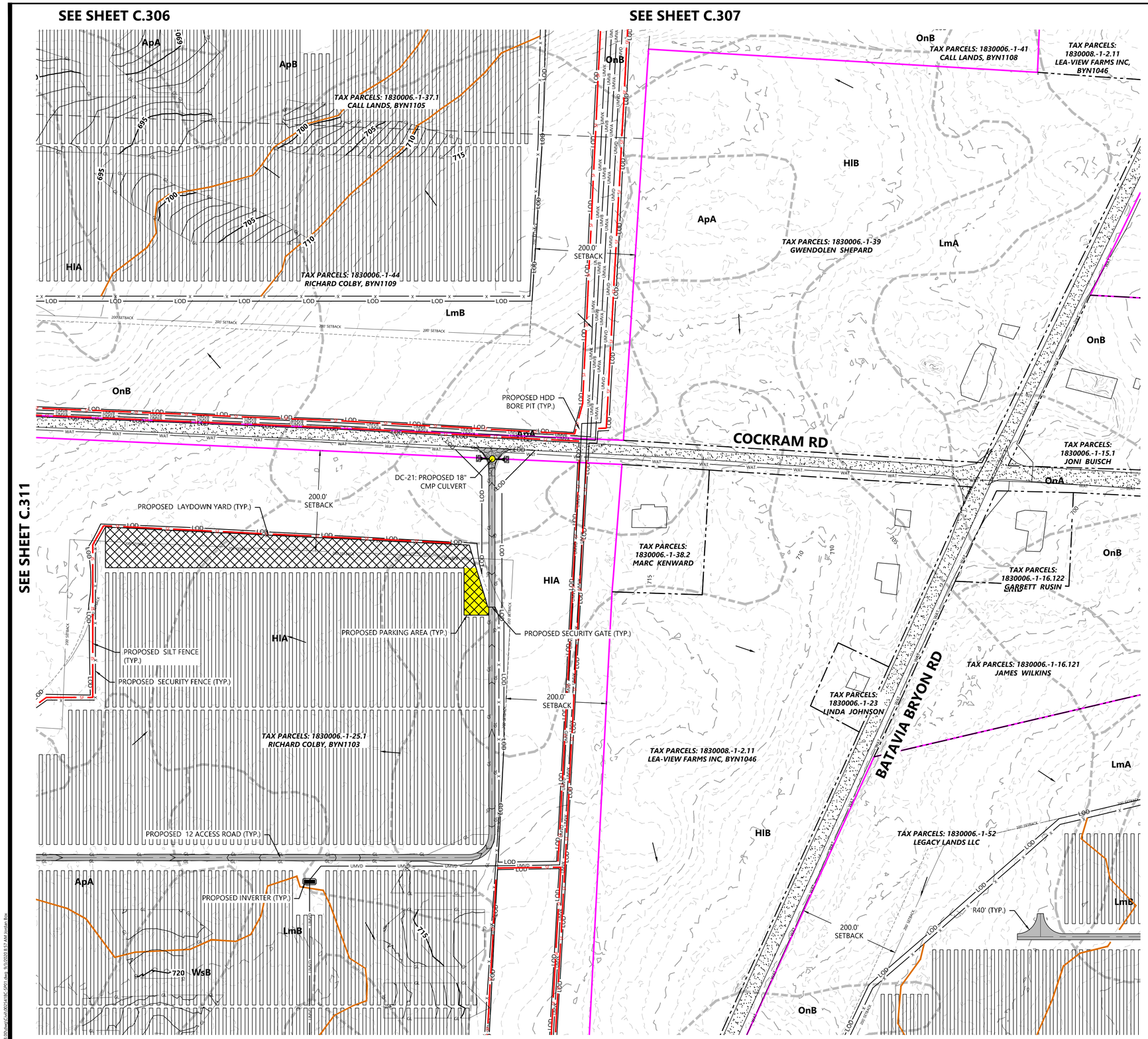

LEGEND:

- PROPERTY LINE
- PARCEL LINE
- LOT LINE
- RIGHT-OF-WAY LINES
- EASEMENT LINES
- EX. STREAM
- EX. EDGE OF WATER
- EX. TREELINE
- EX. WETLAND
- EX. SOILS
- EX. OVERHEAD POWER
- EX. POWER POLE
- EX. UNDERGROUND POWER
- EX. GAS
- EX. OIL PIPELINE
- EX. GRAVEL ROAD
- EX. PAVED ROAD
- EX. INDEX CONTOUR
- EX. INTERVAL CONTOUR
- EX. FENCE
- EX. WATER LINE
- EX. CULVERT
- EX. STRUCTURE
- FLOW ARROW
- PROPOSED SOLAR ARRAY
- PROPOSED BUILDABLE AREA
- PROPOSED SETBACK LINE
- PROPOSED INVERTER
- PROPOSED BATTERY PACK
- PROPOSED ACCESS ROAD
- PROPOSED SECURITY FENCE
- PROPOSED UNDERGROUND COLLECTOR
- PROPOSED OVERHEAD POWERLINE
- PROPOSED HORIZONTAL DIRECTIONAL DRILLING
- PROPOSED LAYDOWN YARD
- PROPOSED LOW WATER CROSSING
- LIMIT OF DISTURBANCE
- PROPOSED CULVERT
- PROPOSED RIP RAP
- PROPOSED INDEX CONTOUR
- PROPOSED INTERVAL CONTOUR
- PROPOSED GRADING LIMITS
- PROPOSED SILT FENCE
- PROPOSED GRADE BREAK
- PROPOSED PARKING AREA
- PROPOSED ROCK CONSTRUCTION ENTRANCE
- PROPOSED HDD BORE PIT LOCATION
- PROPOSED DRAINAGE CROSSING
- PROPOSED FILTRATION BASIN

NOTES:

1. EXISTING STREAM IS BASED ON PUBLICLY AVAILABLE DATA AND SITE CONDITIONS MIGHT DIFFER FROM LOCATION SHOWN ON THE SITE PLAN.

Westwood

Phone (952) 937-5150
Fax (952) 937-5822
Toll Free (888) 937-5150

12701 Whitewater Drive, Suite #300
Minnetonka, MN 55343
westwoodps.com

Westwood Development Consultants, LLC

PREPARED FOR:

NEXTera ENERGY

700 Universe Boulevard
Juno Beach, FL 33408

REVISIONS:

#	DATE	COMMENT
A	06/12/20	Issued for Review
B	09/03/20	Issued for Review

0' 100' 200' 300'

KEY MAP

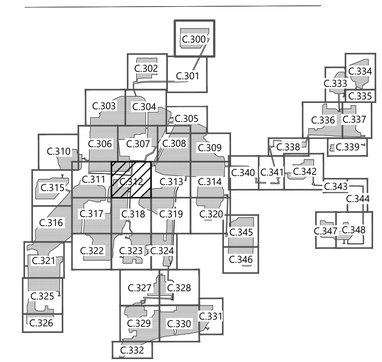

Excelsior Energy Center

Town of Byron, New York

Civil Site Plan - 13

NOT FOR CONSTRUCTION

DATE: 09/03/2020

SHEET: C.312

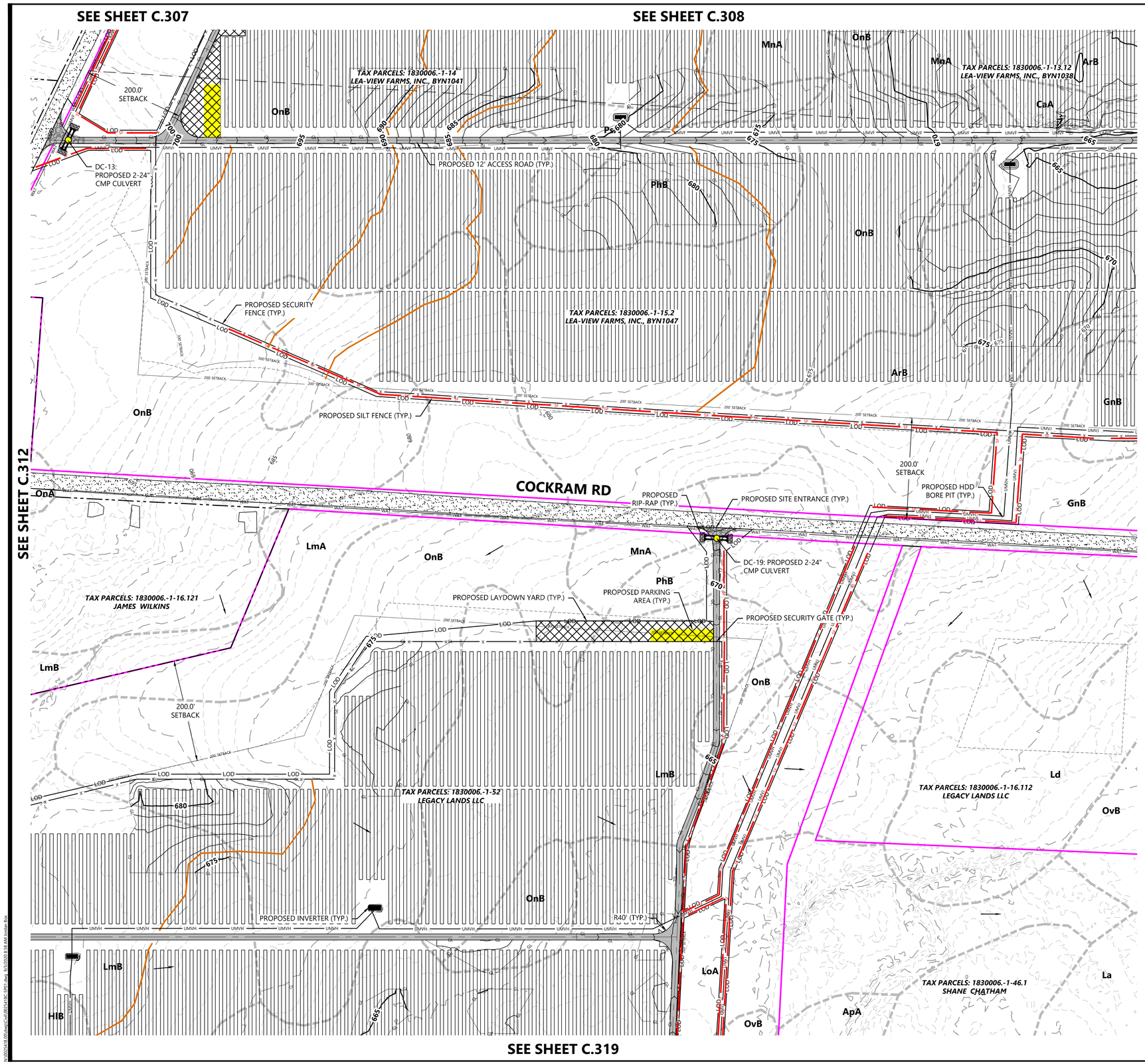

LEGEND:

- PROPERTY LINE
- PARCEL LINE
- LOT LINE
- RIGHT-OF-WAY LINES
- EASEMENT LINES
- EX. STREAM
- EX. EDGE OF WATER
- EX. TREELINE
- EX. WETLAND
- EX. SOILS
- EX. OVERHEAD POWER
- EX. POWER POLE
- EX. UNDERGROUND POWER
- EX. GAS
- EX. OIL PIPELINE
- EX. GRAVEL ROAD
- EX. PAVED ROAD
- EX. INDEX CONTOUR
- EX. INTERVAL CONTOUR
- EX. FENCE
- EX. WATER LINE
- EX. CULVERT
- EX. STRUCTURE
- FLOW ARROW
- PROPOSED SOLAR ARRAY
- PROPOSED BUILDABLE AREA
- PROPOSED SETBACK LINE
- PROPOSED INVERTER
- PROPOSED BATTERY PACK
- PROPOSED ACCESS ROAD
- PROPOSED SECURITY FENCE
- PROPOSED UNDERGROUND COLLECTOR
- PROPOSED OVERHEAD POWERLINE
- PROPOSED HORIZONTAL DIRECTIONAL DRILLING
- PROPOSED LAYDOWN YARD
- PROPOSED LOW WATER CROSSING
- LIMIT OF DISTURBANCE
- PROPOSED CULVERT
- PROPOSED RIP RAP
- PROPOSED INDEX CONTOUR
- PROPOSED INTERVAL CONTOUR
- PROPOSED GRADING LIMITS
- PROPOSED SILT FENCE
- PROPOSED GRADE BREAK
- PROPOSED PARKING AREA
- PROPOSED ROCK CONSTRUCTION ENTRANCE
- PROPOSED HDD BORE PIT LOCATION
- PROPOSED DRAINAGE CROSSING
- PROPOSED FILTRATION BASIN

NOTES:

1. EXISTING STREAM IS BASED ON PUBLICLY AVAILABLE DATA AND SITE CONDITIONS MIGHT DIFFER FROM LOCATION SHOWN ON THE SITE PLAN.

KEY MAP

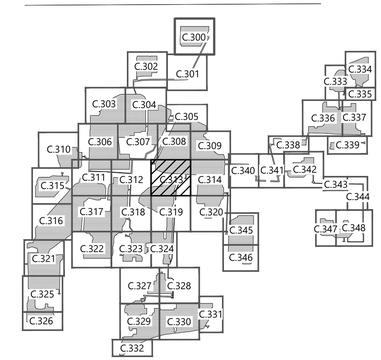

Westwood

Phone (952) 937-5150
Fax (952) 937-5822
Toll Free (888) 937-5150

12701 Whitewater Drive, Suite #300
Minnetonka, MN 55343
westwoodps.com

Westwood Development Consultants, LLC

PREPARED FOR:

NEXTera ENERGY

700 Universe Boulevard
Juno Beach, FL 33408

REVISIONS:

#	DATE	COMMENT
A	06/12/20	Issued for Review
B	09/03/20	Issued for Review

0' 100' 200' 300'

Excelsior Energy Center

Town of Byron, New York

Civil Site Plan - 14

NOT FOR CONSTRUCTION

DATE: 09/03/2020

SHEET: C.313

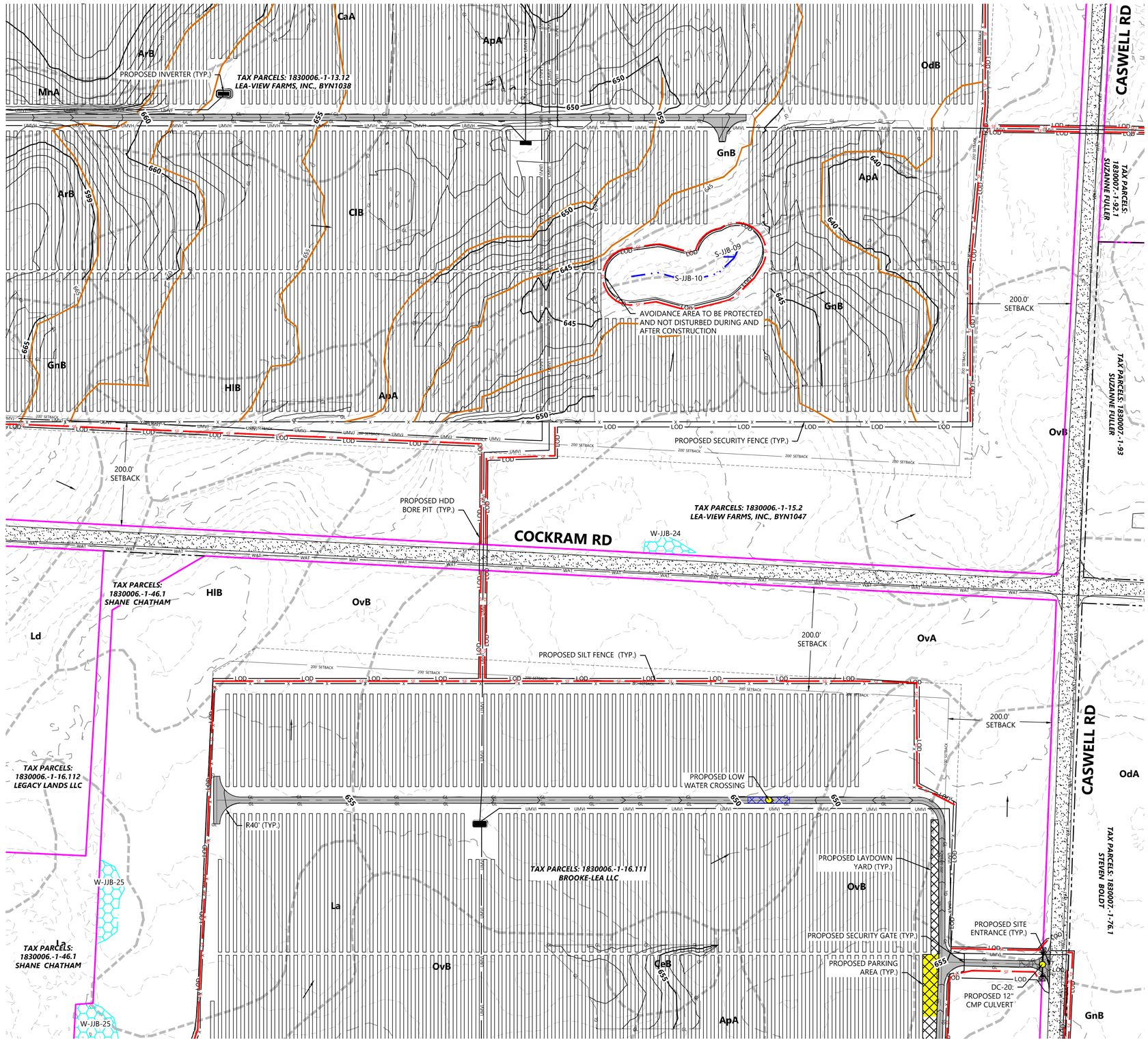

LEGEND:

- PROPERTY LINE
- PARCEL LINE
- LOT LINE
- RIGHT-OF-WAY LINES
- EASEMENT LINES
- EX. STREAM
- EX. EDGE OF WATER
- EX. TREELINE
- EX. WETLAND
- EX. SOILS
- EX. OVERHEAD POWER
- EX. POWER POLE
- EX. UNDERGROUND POWER
- EX. GAS
- EX. OIL PIPELINE
- EX. GRAVEL ROAD
- EX. PAVED ROAD
- EX. INDEX CONTOUR
- EX. INTERVAL CONTOUR
- EX. FENCE
- EX. WATER LINE
- EX. CULVERT
- EX. STRUCTURE
- FLOW ARROW
- PROPOSED SOLAR ARRAY
- PROPOSED BUILDABLE AREA
- PROPOSED SETBACK LINE
- PROPOSED INVERTER
- PROPOSED BATTERY PACK
- PROPOSED ACCESS ROAD
- PROPOSED SECURITY FENCE
- PROPOSED UNDERGROUND COLLECTOR
- PROPOSED OVERHEAD POWERLINE
- PROPOSED HORIZONTAL DIRECTIONAL DRILLING
- PROPOSED LAYDOWN YARD
- PROPOSED LOW WATER CROSSING
- LIMIT OF DISTURBANCE
- PROPOSED CULVERT
- PROPOSED RIP RAP
- PROPOSED INDEX CONTOUR
- PROPOSED INTERVAL CONTOUR
- PROPOSED GRADING LIMITS
- PROPOSED SILT FENCE
- PROPOSED GRADE BREAK
- PROPOSED PARKING AREA
- PROPOSED ROCK CONSTRUCTION ENTRANCE
- PROPOSED HDD BORE PIT LOCATION
- PROPOSED DRAINAGE CROSSING
- PROPOSED FILTRATION BASIN

NOTES:
1. EXISTING STREAM IS BASED ON PUBLICLY AVAILABLE DATA AND SITE CONDITIONS MIGHT DIFFER FROM LOCATION SHOWN ON THE SITE PLAN.

Westwood

Phone (952) 937-5150
Fax (952) 937-5822
Toll Free (888) 937-5150

12701 Whitewater Drive, Suite #300
Minnetonka, MN 55343
westwoodps.com

Westwood Development Consultants, LLC

PREPARED FOR:

NEXTera ENERGY

700 Universe Boulevard
Juno Beach, FL 33408

REVISIONS:

#	DATE	COMMENT
A	06/12/20	Issued for Review
B	09/03/20	Issued for Review

0' 100' 200' 300'

KEY MAP

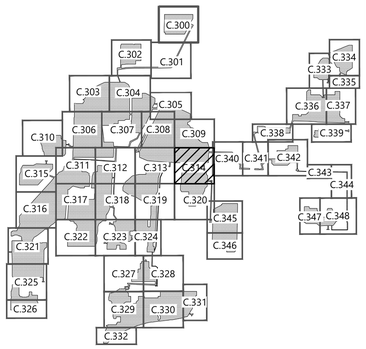

Excelsior Energy Center

Town of Byron, New York

Civil Site Plan - 15

NOT FOR CONSTRUCTION

DATE: 09/03/2020

SHEET: C.314

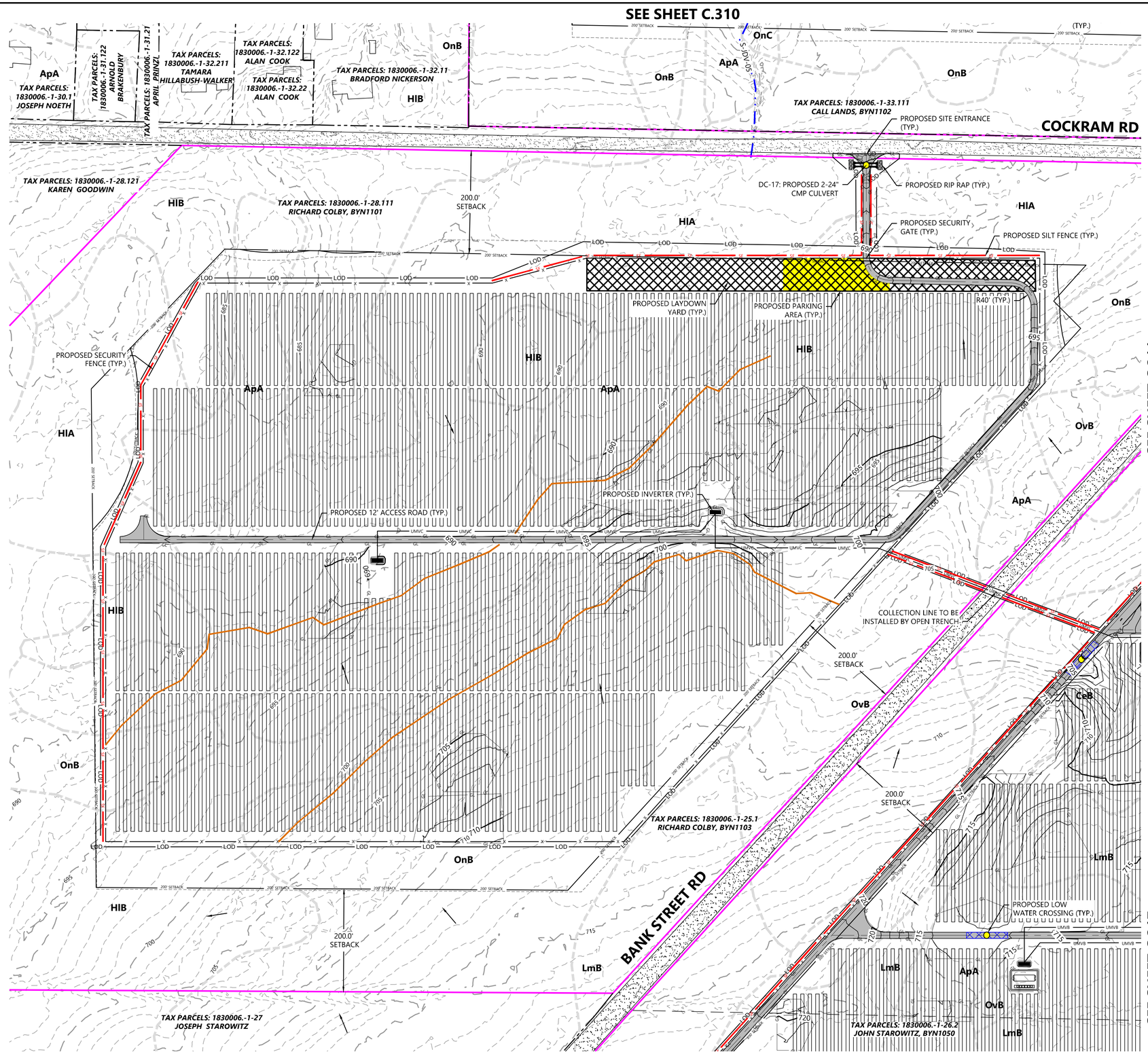

LEGEND:

- PROPERTY LINE
- PARCEL LINE
- LOT LINE
- RIGHT-OF-WAY LINES
- EASEMENT LINES
- EX. STREAM
- EX. EDGE OF WATER
- EX. TREELINE
- EX. WETLAND
- EX. SOILS
- POH — EX. OVERHEAD POWER
- EX. POWER POLE
- PUG — EX. UNDERGROUND POWER
- GAS — EX. GAS
- OIL — EX. OIL PIPELINE
- EX. GRAVEL ROAD
- EX. PAVED ROAD
- 900 — EX. INDEX CONTOUR
- EX. INTERVAL CONTOUR
- X — EX. FENCE
- WAT — EX. WATER LINE
- EX. CULVERT
- EX. STRUCTURE
- FLOW ARROW
- PROPOSED SOLAR ARRAY
- PROPOSED BUILDABLE AREA
- ###' SETBACK — PROPOSED SETBACK LINE
- PROPOSED INVERTER
- PROPOSED BATTERY PACK
- PROPOSED ACCESS ROAD
- X — PROPOSED SECURITY FENCE
- UMV — PROPOSED UNDERGROUND COLLECTOR
- OMV — PROPOSED OVERHEAD POWERLINE
- HDD — PROPOSED HORIZONTAL DIRECTIONAL DRILLING
- PROPOSED LAYDOWN YARD
- PROPOSED LOW WATER CROSSING
- LOD — LIMIT OF DISTURBANCE
- PROPOSED CULVERT
- PROPOSED RIP RAP
- 900 — PROPOSED INDEX CONTOUR
- PROPOSED INTERVAL CONTOUR
- GL — PROPOSED GRADING LIMITS
- SF — PROPOSED SILT FENCE
- PROPOSED GRADE BREAK
- PROPOSED PARKING AREA
- PROPOSED ROCK CONSTRUCTION ENTRANCE
- PROPOSED HDD BORE PIT LOCATION
- PROPOSED DRAINAGE CROSSING
- PROPOSED FILTRATION BASIN

NOTES:

1. EXISTING STREAM IS BASED ON PUBLICLY AVAILABLE DATA AND SITE CONDITIONS MIGHT DIFFER FROM LOCATION SHOWN ON THE SITE PLAN.

KEY MAP

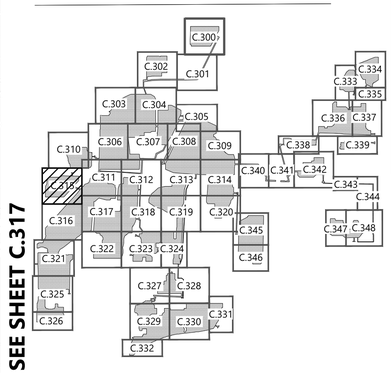

Westwood

Phone (952) 937-5150
Fax (952) 937-5822
Toll Free (888) 937-5150

12701 Whitewater Drive, Suite #300
Minnetonka, MN 55343
westwoodps.com

Westwood Development Consultants, LLC

PREPARED FOR:

NEXTera ENERGY

700 Universe Boulevard
Juno Beach, FL 33408

REVISIONS:

#	DATE	COMMENT
A	06/12/20	Issued for Review
B	09/03/20	Issued for Review

0' 100' 200' 300'

Excelsior Energy Center

Town of Byron, New York

Civil Site Plan - 16

NOT FOR CONSTRUCTION

DATE: 09/03/2020

SHEET: C.315

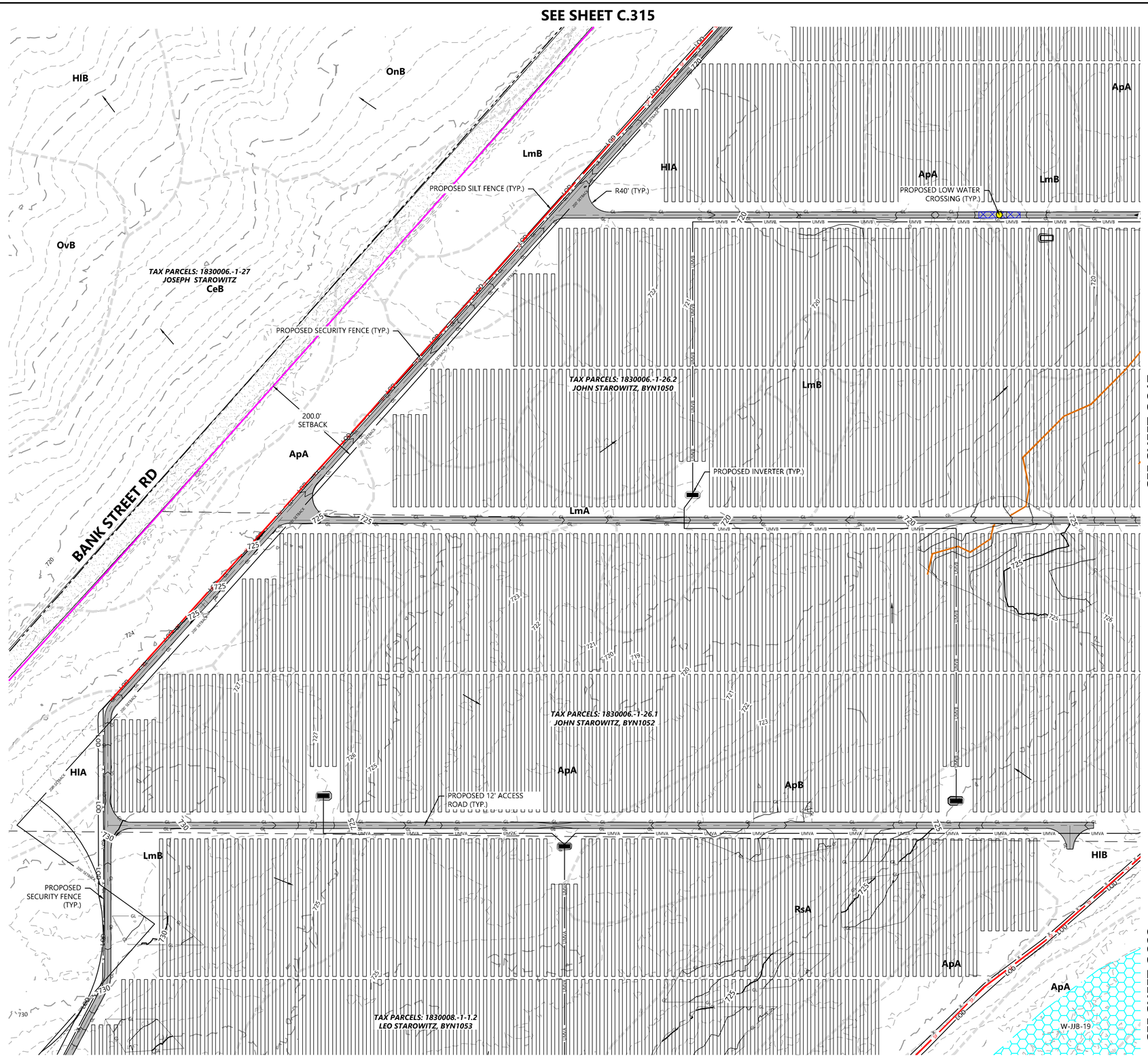

LEGEND:

- PROPERTY LINE
- PARCEL LINE
- LOT LINE
- RIGHT-OF-WAY LINES
- EASEMENT LINES
- EX. STREAM
- EX. EDGE OF WATER
- EX. TREELINE
- EX. WETLAND
- EX. SOILS
- EX. OVERHEAD POWER
- EX. POWER POLE
- EX. UNDERGROUND POWER
- EX. GAS
- EX. OIL PIPELINE
- EX. GRAVEL ROAD
- EX. PAVED ROAD
- EX. INDEX CONTOUR
- EX. INTERVAL CONTOUR
- EX. FENCE
- EX. WATER LINE
- EX. CULVERT
- EX. STRUCTURE
- FLOW ARROW
- PROPOSED SOLAR ARRAY
- PROPOSED BUILDABLE AREA
- PROPOSED SETBACK LINE
- PROPOSED INVERTER
- PROPOSED BATTERY PACK
- PROPOSED ACCESS ROAD
- PROPOSED SECURITY FENCE
- PROPOSED UNDERGROUND COLLECTOR
- PROPOSED OVERHEAD POWERLINE
- PROPOSED HORIZONTAL DIRECTIONAL DRILLING
- PROPOSED LAYDOWN YARD
- PROPOSED LOW WATER CROSSING
- LIMIT OF DISTURBANCE
- PROPOSED CULVERT
- PROPOSED RIP RAP
- PROPOSED INDEX CONTOUR
- PROPOSED INTERVAL CONTOUR
- PROPOSED GRADING LIMITS
- PROPOSED SILT FENCE
- PROPOSED GRADE BREAK
- PROPOSED PARKING AREA
- PROPOSED ROCK CONSTRUCTION ENTRANCE
- PROPOSED HDD BORE PIT LOCATION
- PROPOSED DRAINAGE CROSSING
- PROPOSED FILTRATION BASIN

NOTES:

1. EXISTING STREAM IS BASED ON PUBLICLY AVAILABLE DATA AND SITE CONDITIONS MIGHT DIFFER FROM LOCATION SHOWN ON THE SITE PLAN.

KEY MAP

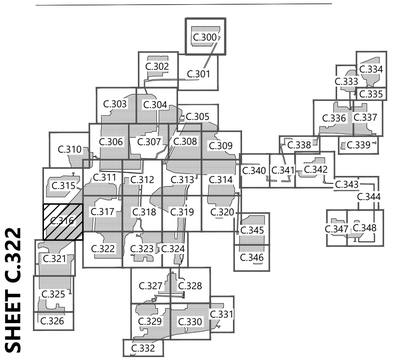

Westwood

Phone (952) 937-5150
Fax (952) 937-5822
Toll Free (888) 937-5150

12701 Whitewater Drive, Suite #300
Minnetonka, MN 55343
westwoodps.com

Westwood Development Consultants, LLC

PREPARED FOR:

NEXTera ENERGY

700 Universe Boulevard
Juno Beach, FL 33408

REVISIONS:

#	DATE	COMMENT
A	06/12/20	Issued for Review
B	09/03/20	Issued for Review

0' 100' 200' 300'

Excelsior Energy Center

Town of Byron, New York

Civil Site Plan - 17

NOT FOR CONSTRUCTION

DATE: 09/03/2020

SHEET: C.316

SEE SHEET C.311

SEE SHEET C.315

SEE SHEET C.316

SEE SHEET C.318

SEE SHEET C.322

TAX PARCELS: 1830006.-1-25.1
RICHARD COLBY, BYN1103

AVOIDANCE AREA TO BE PROTECTED AND NOT DISTURBED DURING OR AFTER CONSTRUCTION

TAX PARCELS: 1830006.-1-26.2
JOHN STAROWITZ, BYN1050

R40' (TYP.)

PROPOSED SECURITY FENCE (TYP.)

PROPOSED 0.197 AC-FT FILTRATION BASIN

TAX PARCELS: 1830006.-1-22
LEGACY LANDS LLC

PROPOSED 12' ACCESS ROAD (TYP.)

PROPOSED INVERTER (TYP.)

PROPOSED SILT FENCE (TYP.)

TAX PARCELS: 1830006.-1-26.1
JOHN STAROWITZ, BYN1052

OvA
LmB
OvB
CeB
ApA
HlB
OnB
W-JJB-18
W-JJB-17

LEGEND:

- PROPERTY LINE
- PARCEL LINE
- LOT LINE
- RIGHT-OF-WAY LINES
- EASEMENT LINES
- EX. STREAM
- EX. EDGE OF WATER
- EX. TREELINE
- EX. WETLAND
- EX. SOILS
- EX. OVERHEAD POWER
- EX. POWER POLE
- EX. UNDERGROUND POWER
- EX. GAS
- EX. OIL PIPELINE
- EX. GRAVEL ROAD
- EX. PAVED ROAD
- EX. INDEX CONTOUR
- EX. INTERVAL CONTOUR
- EX. FENCE
- EX. WATER LINE
- EX. CULVERT
- EX. STRUCTURE
- FLOW ARROW
- PROPOSED SOLAR ARRAY
- PROPOSED BUILDABLE AREA
- PROPOSED SETBACK LINE
- PROPOSED INVERTER
- PROPOSED BATTERY PACK
- PROPOSED ACCESS ROAD
- PROPOSED SECURITY FENCE
- PROPOSED UNDERGROUND COLLECTOR
- PROPOSED OVERHEAD POWERLINE
- PROPOSED HORIZONTAL DIRECTIONAL DRILLING
- PROPOSED LAYDOWN YARD
- PROPOSED LOW WATER CROSSING
- LIMIT OF DISTURBANCE
- PROPOSED CULVERT
- PROPOSED RIP RAP
- PROPOSED INDEX CONTOUR
- PROPOSED INTERVAL CONTOUR
- PROPOSED GRADING LIMITS
- PROPOSED SILT FENCE
- PROPOSED GRADE BREAK
- PROPOSED PARKING AREA
- PROPOSED ROCK CONSTRUCTION ENTRANCE
- PROPOSED HDD BORE PIT LOCATION
- PROPOSED DRAINAGE CROSSING
- PROPOSED FILTRATION BASIN

NOTES:
1. EXISTING STREAM IS BASED ON PUBLICLY AVAILABLE DATA AND SITE CONDITIONS MIGHT DIFFER FROM LOCATION SHOWN ON THE SITE PLAN.

KEY MAP

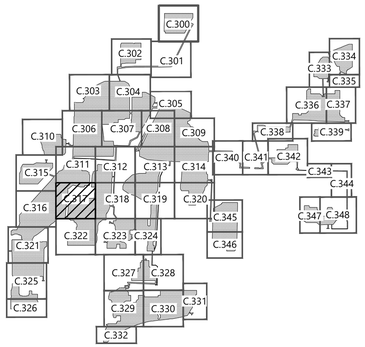

Westwood

Phone (952) 937-5150
Fax (952) 937-5822
Toll Free (888) 937-5150
12701 Whitewater Drive, Suite #300
Minnetonka, MN 55343
westwoodps.com

Westwood Development Consultants, LLC

PREPARED FOR:

NEXTera ENERGY

700 Universe Boulevard
Juno Beach, FL 33408

REVISIONS:

#	DATE	COMMENT
A	06/12/20	Issued for Review
B	09/03/20	Issued for Review

0' 100' 200' 300'

Excelsior Energy Center

Town of Byron, New York

Civil Site Plan - 18

NOT FOR CONSTRUCTION

DATE: 09/03/2020

SHEET: C.317

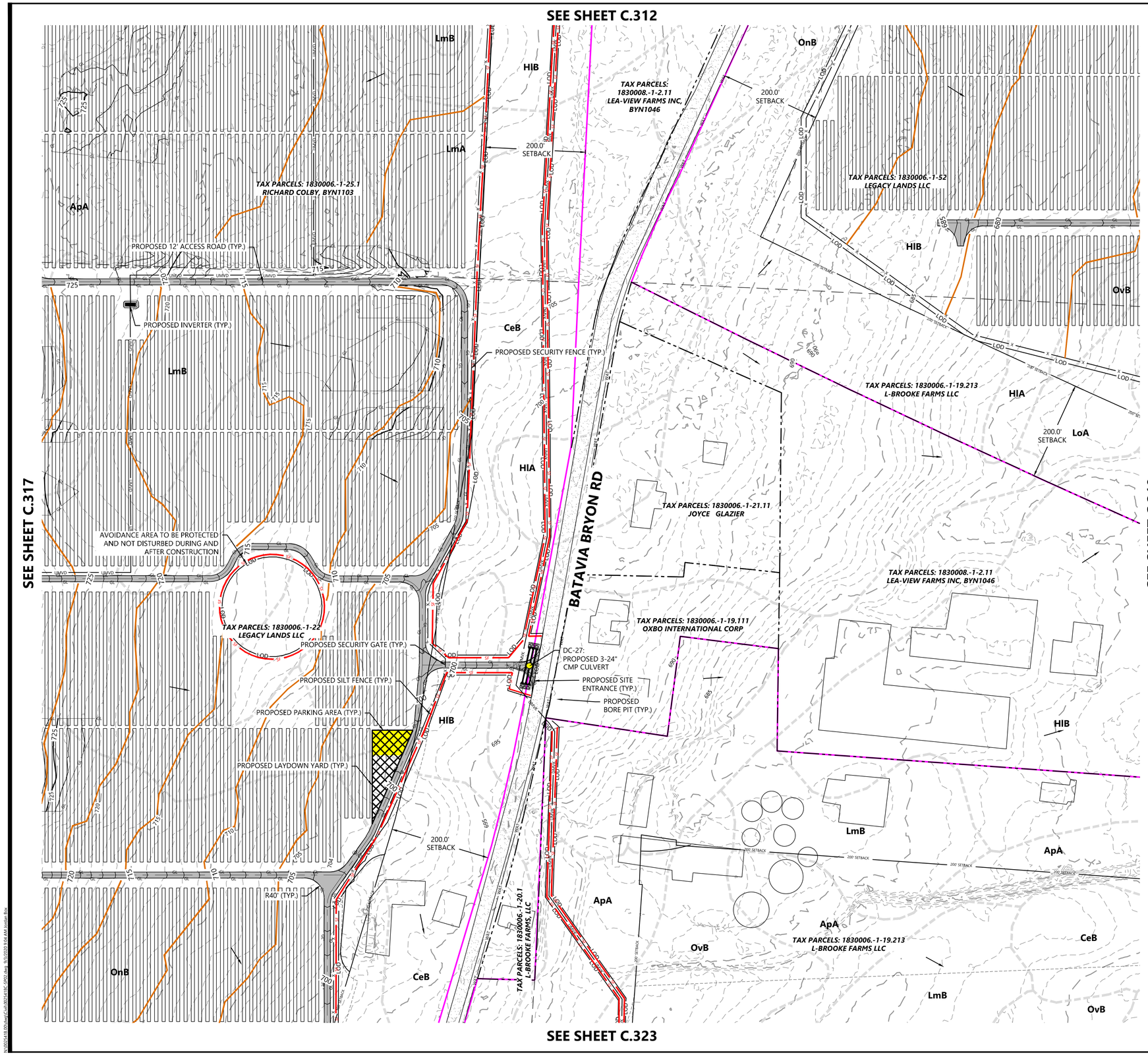

LEGEND:

- PROPERTY LINE
- PARCEL LINE
- LOT LINE
- RIGHT-OF-WAY LINES
- EASEMENT LINES
- EX. STREAM
- EX. EDGE OF WATER
- EX. TREELINE
- EX. WETLAND
- EX. SOILS
- EX. OVERHEAD POWER
- EX. POWER POLE
- EX. UNDERGROUND POWER
- EX. GAS
- EX. OIL PIPELINE
- EX. GRAVEL ROAD
- EX. PAVED ROAD
- EX. INDEX CONTOUR
- EX. INTERVAL CONTOUR
- EX. FENCE
- EX. WATER LINE
- EX. CULVERT
- EX. STRUCTURE
- FLOW ARROW
- PROPOSED SOLAR ARRAY
- PROPOSED BUILDABLE AREA
- PROPOSED SETBACK LINE
- PROPOSED INVERTER
- PROPOSED BATTERY PACK
- PROPOSED ACCESS ROAD
- PROPOSED SECURITY FENCE
- PROPOSED UNDERGROUND COLLECTOR
- PROPOSED OVERHEAD POWERLINE
- PROPOSED HORIZONTAL DIRECTIONAL DRILLING
- PROPOSED LAYDOWN YARD
- PROPOSED LOW WATER CROSSING
- LIMIT OF DISTURBANCE
- PROPOSED CULVERT
- PROPOSED RIP RAP
- PROPOSED INDEX CONTOUR
- PROPOSED INTERVAL CONTOUR
- PROPOSED GRADING LIMITS
- PROPOSED SILT FENCE
- PROPOSED GRADE BREAK
- PROPOSED PARKING AREA
- PROPOSED ROCK CONSTRUCTION ENTRANCE
- PROPOSED HDD BORE PIT LOCATION
- PROPOSED DRAINAGE CROSSING
- PROPOSED FILTRATION BASIN

NOTES:

1. EXISTING STREAM IS BASED ON PUBLICLY AVAILABLE DATA AND SITE CONDITIONS MIGHT DIFFER FROM LOCATION SHOWN ON THE SITE PLAN.

KEY MAP

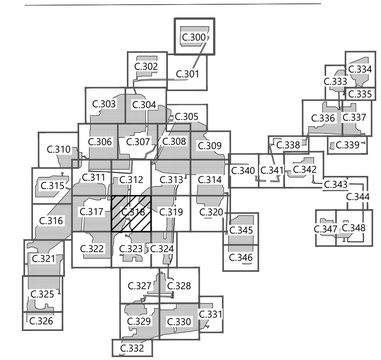

Westwood

Phone (952) 937-5150
Fax (952) 937-5822
Toll Free (888) 937-5150

12701 Whitewater Drive, Suite #300
Minnetonka, MN 55343
westwoodps.com

Westwood Development Consultants, LLC

PREPARED FOR:

NEXTera ENERGY

700 Universe Boulevard
Juno Beach, FL 33408

REVISIONS:

#	DATE	COMMENT
A	06/12/20	Issued for Review
B	09/03/20	Issued for Review

0' 100' 200' 300'

Excelsior Energy Center

Town of Byron, New York

Civil Site Plan - 19

NOT FOR CONSTRUCTION

DATE: 09/03/2020

SHEET: C.318

SEE SHEET C.313

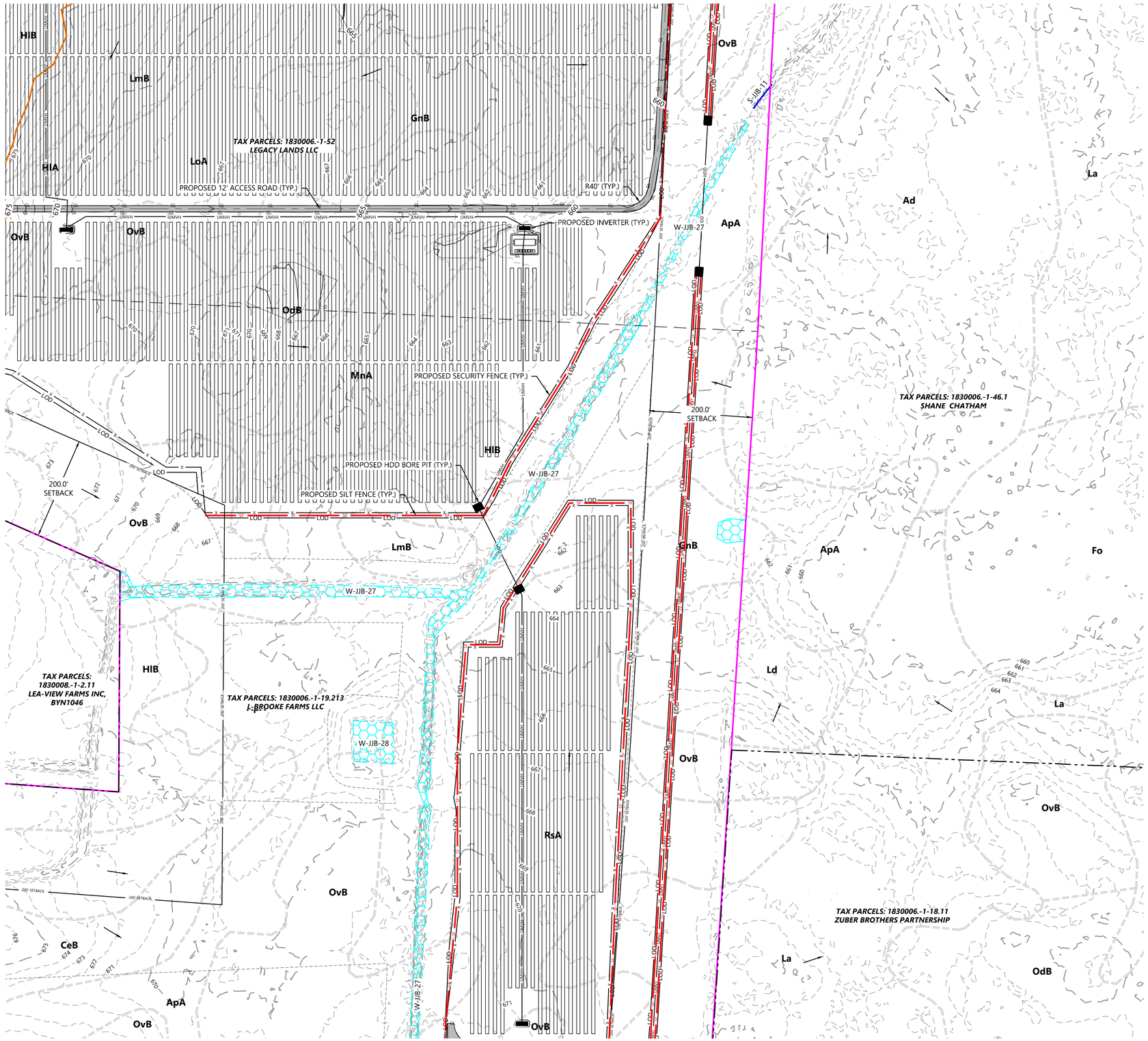

SEE SHEET C.318

SEE SHEET C.320

SEE SHEET C.324

LEGEND:

- PROPERTY LINE
- PARCEL LINE
- LOT LINE
- RIGHT-OF-WAY LINES
- EASEMENT LINES
- EX. STREAM
- EX. EDGE OF WATER
- EX. TREELINE
- EX. WETLAND
- EX. SOILS
- EX. OVERHEAD POWER
- EX. POWER POLE
- EX. UNDERGROUND POWER
- EX. GAS
- EX. OIL PIPELINE
- EX. GRAVEL ROAD
- EX. PAVED ROAD
- EX. INDEX CONTOUR
- EX. INTERVAL CONTOUR
- EX. FENCE
- EX. WATER LINE
- EX. CULVERT
- EX. STRUCTURE
- FLOW ARROW
- PROPOSED SOLAR ARRAY
- PROPOSED BUILDABLE AREA
- PROPOSED SETBACK LINE
- PROPOSED INVERTER
- PROPOSED BATTERY PACK
- PROPOSED ACCESS ROAD
- PROPOSED SECURITY FENCE
- PROPOSED UNDERGROUND COLLECTOR
- PROPOSED OVERHEAD POWERLINE
- PROPOSED HORIZONTAL DIRECTIONAL DRILLING
- PROPOSED LAYDOWN YARD
- PROPOSED LOW WATER CROSSING
- LIMIT OF DISTURBANCE
- PROPOSED CULVERT
- PROPOSED RIP RAP
- PROPOSED INDEX CONTOUR
- PROPOSED INTERVAL CONTOUR
- PROPOSED GRADING LIMITS
- PROPOSED SILT FENCE
- PROPOSED GRADE BREAK
- PROPOSED PARKING AREA
- PROPOSED ROCK CONSTRUCTION ENTRANCE
- PROPOSED HDD BORE PIT LOCATION
- PROPOSED DRAINAGE CROSSING
- PROPOSED FILTRATION BASIN

NOTES:

1. EXISTING STREAM IS BASED ON PUBLICLY AVAILABLE DATA AND SITE CONDITIONS MIGHT DIFFER FROM LOCATION SHOWN ON THE SITE PLAN.

KEY MAP

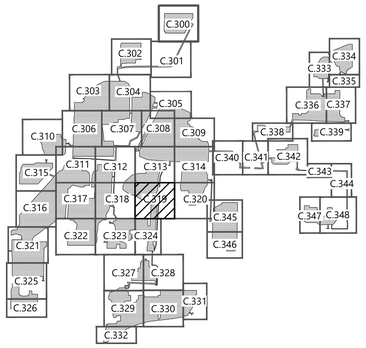

Westwood

Phone (952) 937-5150
Fax (952) 937-5822
Tol Free (888) 937-5150

12701 Whitewater Drive, Suite #300
Minnetonka, MN 55343
westwoodps.com

Westwood Development Consultants, LLC

PREPARED FOR:

NEXTera ENERGY

700 Universe Boulevard
Juno Beach, FL 33408

REVISIONS:

#	DATE	COMMENT
A	06/12/20	Issued for Review
B	09/03/20	Issued for Review

0' 100' 200' 300'

Excelsior Energy Center

Town of Byron, New York

Civil Site Plan - 20

NOT FOR CONSTRUCTION

DATE: 09/03/2020

SHEET: C.319

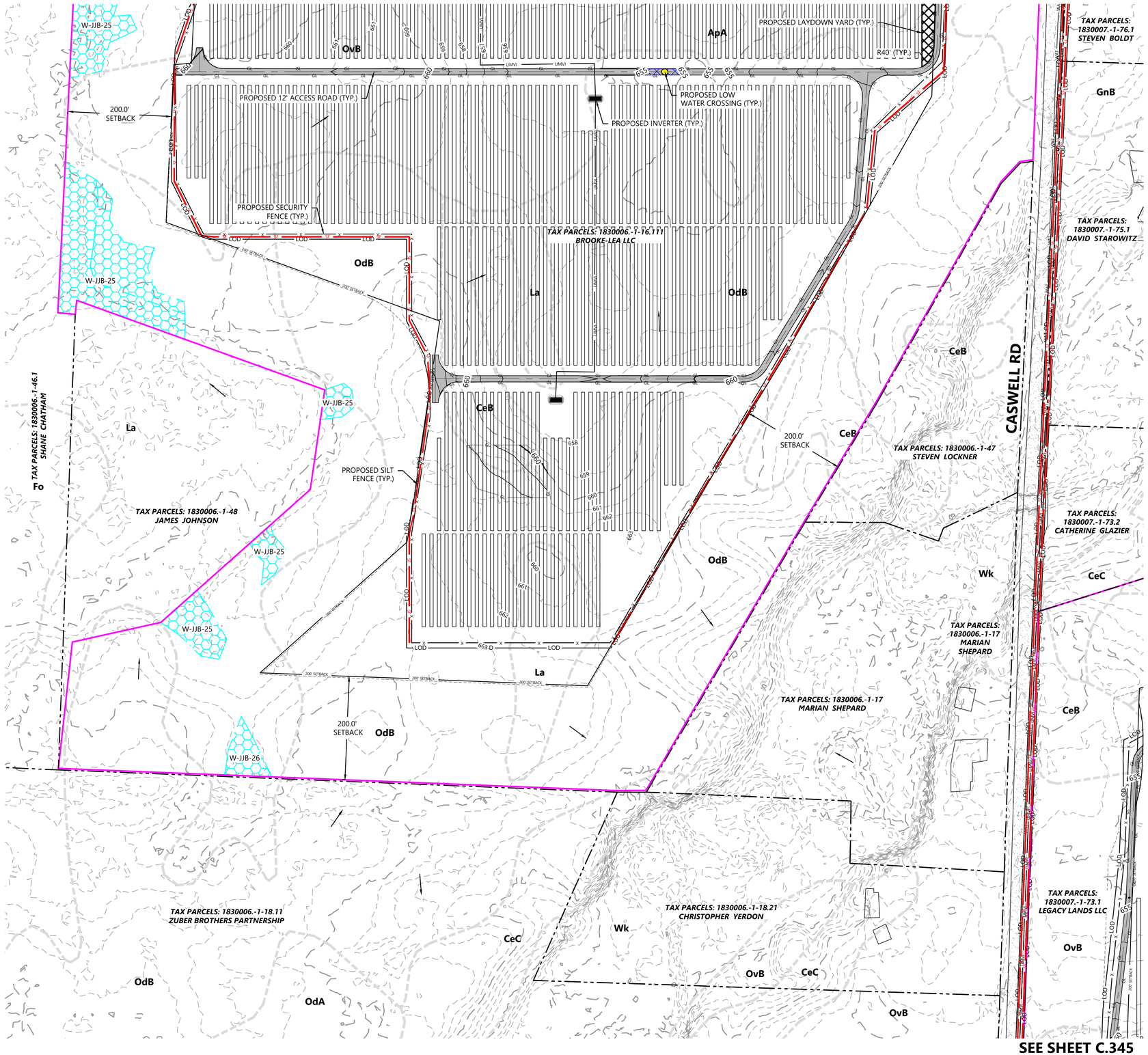

LEGEND:

- PROPERTY LINE
- PARCEL LINE
- LOT LINE
- RIGHT-OF-WAY LINES
- EASEMENT LINES
- EX. STREAM
- EX. EDGE OF WATER
- EX. TREELINE
- EX. WETLAND
- EX. SOILS
- EX. OVERHEAD POWER
- EX. POWER POLE
- EX. UNDERGROUND POWER
- EX. GAS
- EX. OIL PIPELINE
- EX. GRAVEL ROAD
- EX. PAVED ROAD
- EX. INDEX CONTOUR
- EX. INTERVAL CONTOUR
- EX. FENCE
- EX. WATER LINE
- EX. CULVERT
- EX. STRUCTURE
- FLOW ARROW
- PROPOSED SOLAR ARRAY
- PROPOSED BUILDABLE AREA
- PROPOSED SETBACK LINE
- PROPOSED INVERTER
- PROPOSED BATTERY PACK
- PROPOSED ACCESS ROAD
- PROPOSED SECURITY FENCE
- PROPOSED UNDERGROUND COLLECTOR
- PROPOSED OVERHEAD POWERLINE
- PROPOSED HORIZONTAL DIRECTIONAL DRILLING
- PROPOSED LAYDOWN YARD
- PROPOSED LOW WATER CROSSING
- LIMIT OF DISTURBANCE
- PROPOSED CULVERT
- PROPOSED RIP RAP
- PROPOSED INDEX CONTOUR
- PROPOSED INTERVAL CONTOUR
- PROPOSED GRADING LIMITS
- PROPOSED SILT FENCE
- PROPOSED GRADE BREAK
- PROPOSED PARKING AREA
- PROPOSED ROCK CONSTRUCTION ENTRANCE
- PROPOSED HDD BORE PIT LOCATION
- PROPOSED DRAINAGE CROSSING
- PROPOSED FILTRATION BASIN

NOTES:

1. EXISTING STREAM IS BASED ON PUBLICLY AVAILABLE DATA AND SITE CONDITIONS MIGHT DIFFER FROM LOCATION SHOWN ON THE SITE PLAN.

KEY MAP

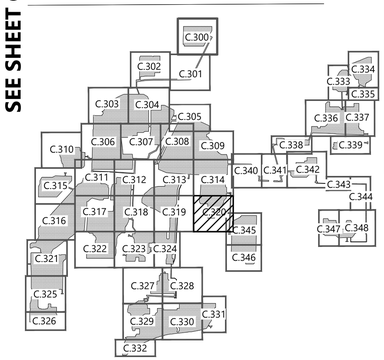

Westwood

Phone (952) 937-5150 12701 Whitewater Drive, Suite #300
Fax (952) 937-5822 Minnetonka, MN 55343
Toll Free (888) 937-5150 westwoodps.com

Westwood Development Consultants, LLC

PREPARED FOR:

NEXTera ENERGY

700 Universe Boulevard
Juno Beach, FL 33408

REVISIONS:

#	DATE	COMMENT
A	06/12/20	Issued for Review
B	09/03/20	Issued for Review

0' 100' 200' 300'

Excelsior Energy Center

Town of Byron, New York

Civil Site Plan - 21

NOT FOR CONSTRUCTION

DATE: 09/03/2020

SHEET: C.320

SEE SHEET C.316

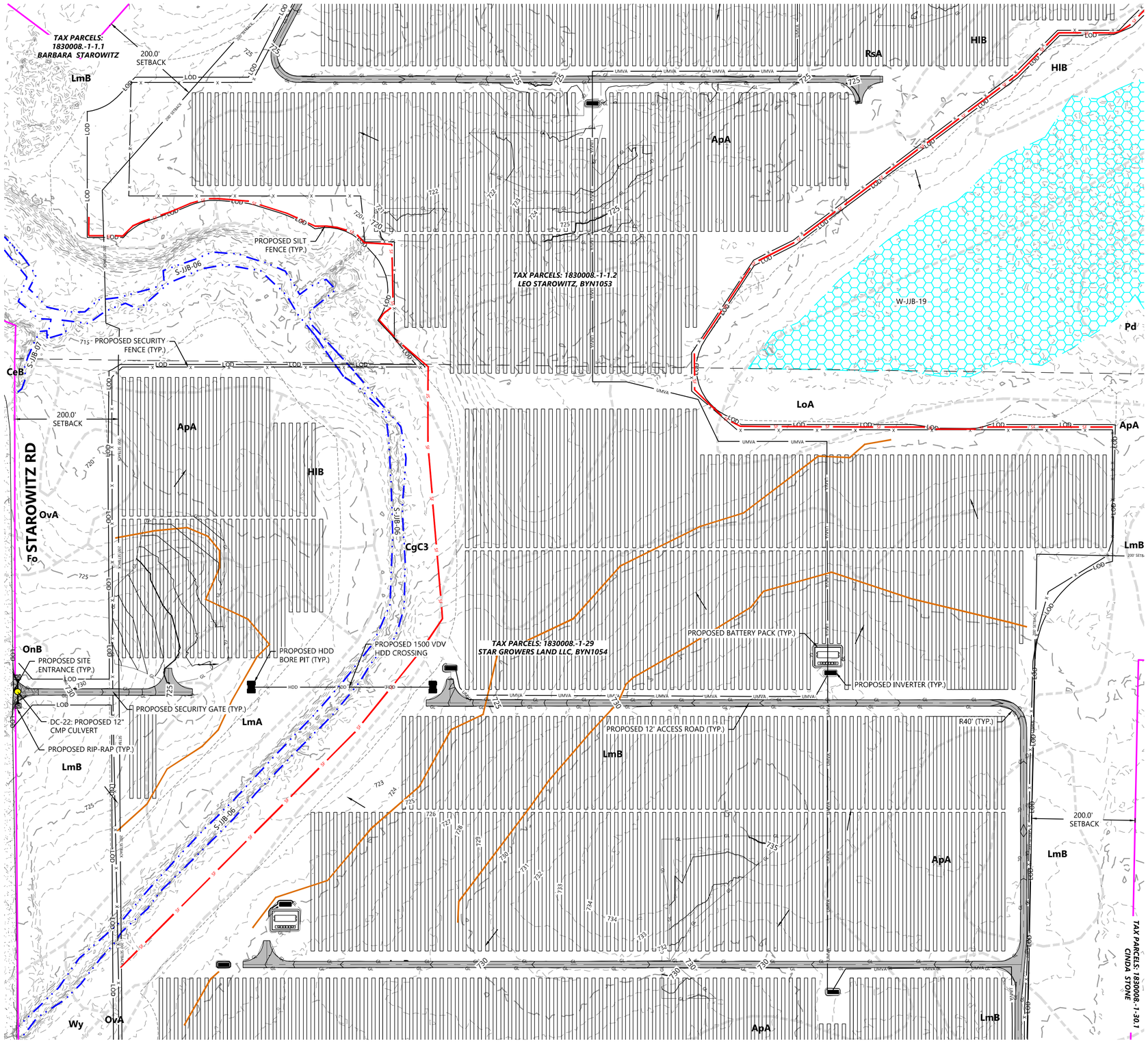

SEE SHEET C.325

LEGEND:

- PROPERTY LINE
- PARCEL LINE
- LOT LINE
- RIGHT-OF-WAY LINES
- EASEMENT LINES
- EX. STREAM
- EX. EDGE OF WATER
- EX. TREELINE
- EX. WETLAND
- EX. SOILS
- EX. OVERHEAD POWER
- EX. POWER POLE
- EX. UNDERGROUND POWER
- EX. GAS
- EX. OIL PIPELINE
- EX. GRAVEL ROAD
- EX. PAVED ROAD
- EX. INDEX CONTOUR
- EX. INTERVAL CONTOUR
- EX. FENCE
- EX. WATER LINE
- EX. CULVERT
- EX. STRUCTURE
- FLOW ARROW
- PROPOSED SOLAR ARRAY
- PROPOSED BUILDABLE AREA
- PROPOSED SETBACK LINE
- PROPOSED INVERTER
- PROPOSED BATTERY PACK
- PROPOSED ACCESS ROAD
- PROPOSED SECURITY FENCE
- PROPOSED UNDERGROUND COLLECTOR
- PROPOSED OVERHEAD POWERLINE
- PROPOSED HORIZONTAL DIRECTIONAL DRILLING
- PROPOSED LAYDOWN YARD
- PROPOSED LOW WATER CROSSING
- LIMIT OF DISTURBANCE
- PROPOSED CULVERT
- PROPOSED RIP RAP
- PROPOSED INDEX CONTOUR
- PROPOSED INTERVAL CONTOUR
- PROPOSED GRADING LIMITS
- PROPOSED SILT FENCE
- PROPOSED GRADE BREAK
- PROPOSED PARKING AREA
- PROPOSED ROCK CONSTRUCTION ENTRANCE
- PROPOSED HDD BORE PIT LOCATION
- PROPOSED DRAINAGE CROSSING
- PROPOSED FILTRATION BASIN

NOTES:

1. EXISTING STREAM IS BASED ON PUBLICLY AVAILABLE DATA AND SITE CONDITIONS MIGHT DIFFER FROM LOCATION SHOWN ON THE SITE PLAN.

KEY MAP

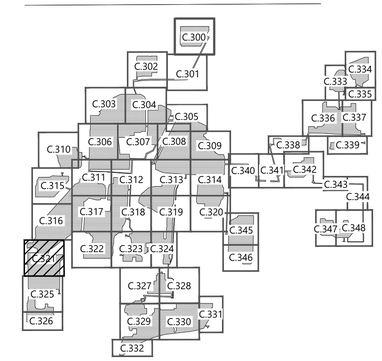

Westwood

Phone (952) 937-5150
Fax (952) 937-5822
Toll Free (888) 937-5150

12701 Whitewater Drive, Suite #300
Minnetonka, MN 55343
westwoodps.com

Westwood Development Consultants, LLC

PREPARED FOR:

NEXTera ENERGY

700 Universe Boulevard
Juno Beach, FL 33408

REVISIONS:

#	DATE	COMMENT
A	06/12/20	Issued for Review
B	09/03/20	Issued for Review

Excelsior Energy Center

Town of Byron, New York

Civil Site Plan - 22

NOT FOR CONSTRUCTION

DATE: 09/03/2020

SHEET: C.321

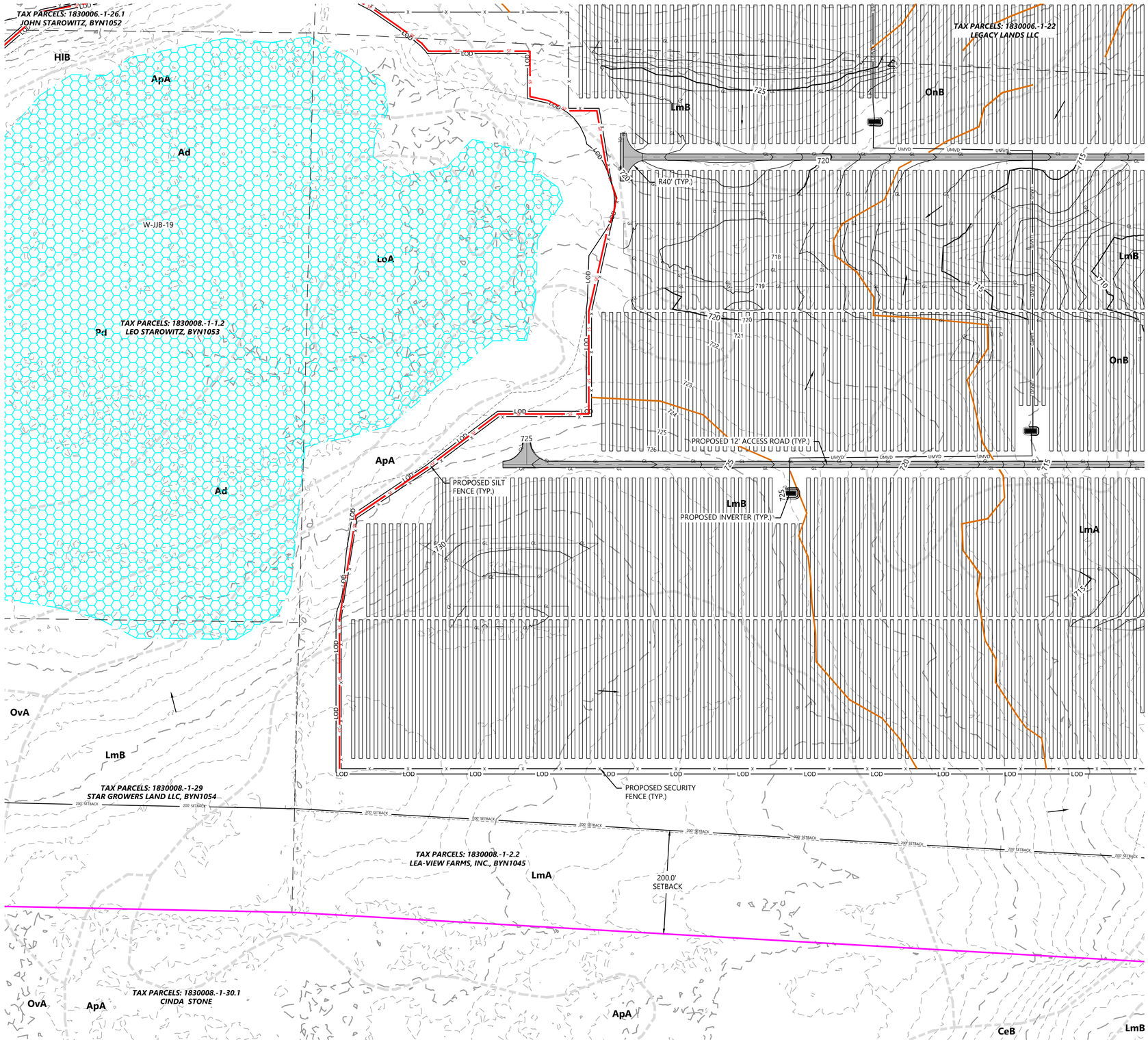

LEGEND:

- PROPERTY LINE
- PARCEL LINE
- LOT LINE
- RIGHT-OF-WAY LINES
- EASEMENT LINES
- EX. STREAM
- EX. EDGE OF WATER
- EX. TREELINE
- EX. WETLAND
- EX. SOILS
- EX. OVERHEAD POWER
- EX. POWER POLE
- EX. UNDERGROUND POWER
- EX. GAS
- EX. OIL PIPELINE
- EX. GRAVEL ROAD
- EX. PAVED ROAD
- EX. INDEX CONTOUR
- EX. INTERVAL CONTOUR
- EX. FENCE
- EX. WATER LINE
- EX. CULVERT
- EX. STRUCTURE
- FLOW ARROW
- PROPOSED SOLAR ARRAY
- PROPOSED BUILDABLE AREA
- PROPOSED SETBACK LINE
- PROPOSED INVERTER
- PROPOSED BATTERY PACK
- PROPOSED ACCESS ROAD
- PROPOSED SECURITY FENCE
- PROPOSED UNDERGROUND COLLECTOR
- PROPOSED OVERHEAD POWERLINE
- PROPOSED HORIZONTAL DIRECTIONAL DRILLING
- PROPOSED LAYDOWN YARD
- PROPOSED LOW WATER CROSSING
- LIMIT OF DISTURBANCE
- PROPOSED CULVERT
- PROPOSED RIP RAP
- PROPOSED INDEX CONTOUR
- PROPOSED INTERVAL CONTOUR
- PROPOSED GRADING LIMITS
- PROPOSED SILT FENCE
- PROPOSED GRADE BREAK
- PROPOSED PARKING AREA
- PROPOSED ROCK CONSTRUCTION ENTRANCE
- PROPOSED HDD BORE PIT LOCATION
- PROPOSED DRAINAGE CROSSING
- PROPOSED FILTRATION BASIN

NOTES:

1. EXISTING STREAM IS BASED ON PUBLICLY AVAILABLE DATA AND SITE CONDITIONS MIGHT DIFFER FROM LOCATION SHOWN ON THE SITE PLAN.

KEY MAP

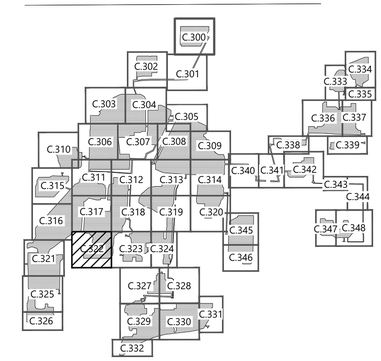

Westwood

Phone (952) 937-5150
Fax (952) 937-5822
Toll Free (888) 937-5150

12701 Whitewater Drive, Suite #300
Minnetonka, MN 55343
westwoodps.com

Westwood Development Consultants, LLC

PREPARED FOR:

NEXTera ENERGY

700 Universe Boulevard
Juno Beach, FL 33408

REVISIONS:

#	DATE	COMMENT
A	06/12/20	Issued for Review
B	09/03/20	Issued for Review

0' 100' 200' 300'

Excelsior Energy Center

Town of Byron, New York

Civil Site Plan - 23

NOT FOR CONSTRUCTION

DATE: 09/03/2020

SHEET: C.322

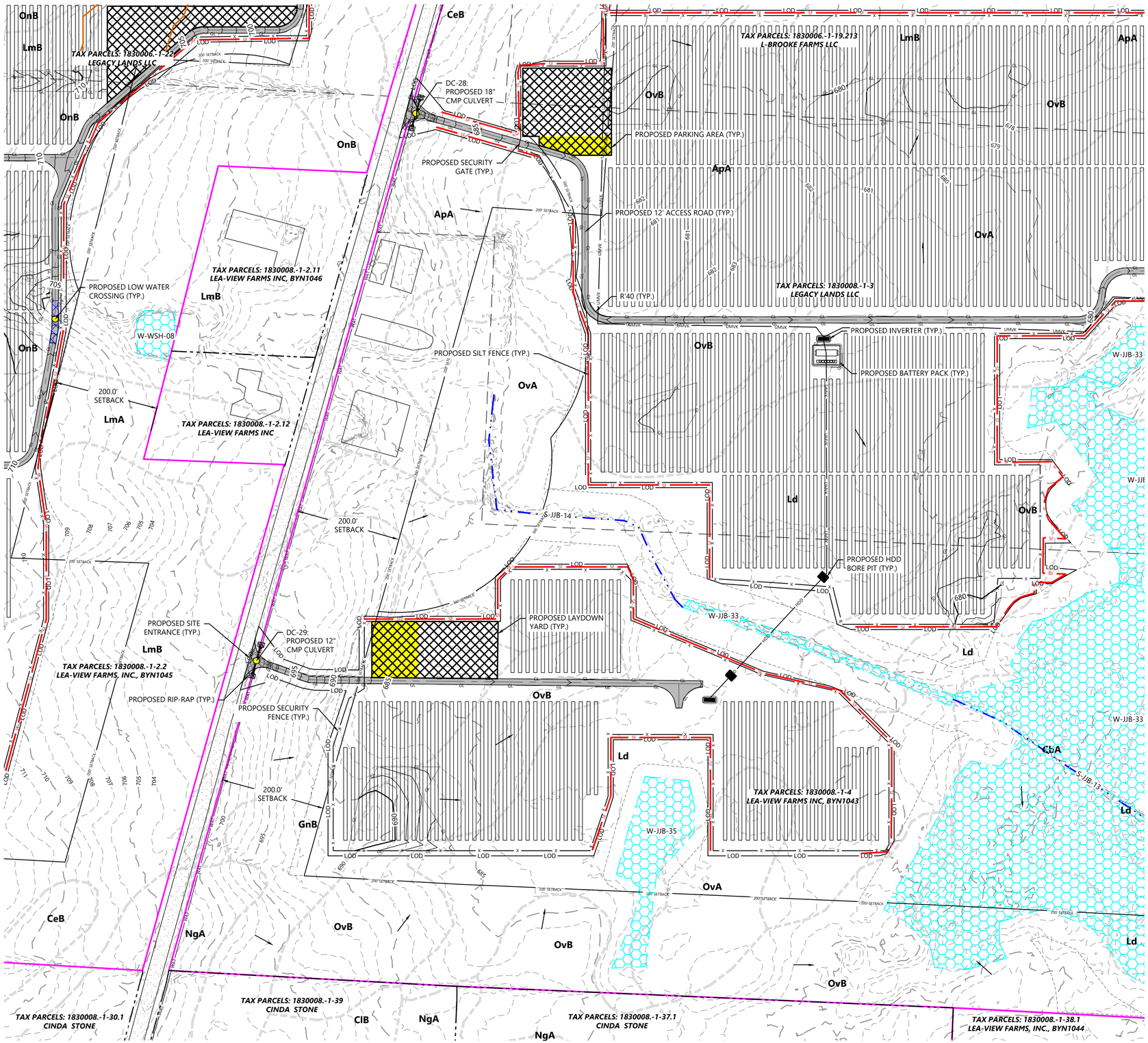

LEGEND:

- PROPERTY LINE
- PARCEL LINE
- LOT LINE
- RIGHT-OF-WAY LINES
- EASEMENT LINES
- EX. STREAM
- EX. EDGE OF WATER
- EX. TREELINE
- EX. WETLAND
- EX. SOILS
- EX. OVERHEAD POWER
- EX. POWER POLE
- EX. UNDERGROUND POWER
- EX. GAS
- EX. OIL PIPELINE
- EX. GRAVEL ROAD
- EX. PAVED ROAD
- EX. INDEX CONTOUR
- EX. INTERVAL CONTOUR
- EX. FENCE
- EX. WATER LINE
- EX. CULVERT
- EX. STRUCTURE
- FLOW ARROW
- PROPOSED SOLAR ARRAY
- PROPOSED BUILDABLE AREA
- PROPOSED SETBACK LINE
- PROPOSED INVERTER
- PROPOSED BATTERY PACK
- PROPOSED ACCESS ROAD
- PROPOSED SECURITY FENCE
- PROPOSED UNDERGROUND COLLECTOR
- PROPOSED OVERHEAD POWERLINE
- PROPOSED HORIZONTAL DIRECTIONAL DRILLING
- PROPOSED LAYDOWN YARD
- PROPOSED LOW WATER CROSSING
- LIMIT OF DISTURBANCE
- PROPOSED CULVERT
- PROPOSED RIP RAP
- PROPOSED INDEX CONTOUR
- PROPOSED INTERVAL CONTOUR
- PROPOSED GRADING LIMITS
- PROPOSED SILT FENCE
- PROPOSED GRADE BREAK
- PROPOSED PARKING AREA
- PROPOSED ROCK CONSTRUCTION ENTRANCE
- PROPOSED HDD BORE PIT LOCATION
- PROPOSED DRAINAGE CROSSING
- PROPOSED FILTRATION BASIN

NOTES:
1. EXISTING STREAM IS BASED ON PUBLICLY AVAILABLE DATA AND SITE CONDITIONS MIGHT DIFFER FROM LOCATION SHOWN ON THE SITE PLAN.

Westwood

Phone (952) 937-5150
Fax (952) 937-5822
Toll Free (888) 937-5150

12701 Whitewater Drive, Suite #300
Minnetonka, MN 55343
westwoodps.com

Westwood Development Consultants, LLC

PREPARED FOR:

NEXTera ENERGY

700 Universe Boulevard
Juno Beach, FL 33408

REVISIONS:

#	DATE	COMMENT
A	06/12/20	Issued for Review
B	09/03/20	Issued for Review

0' 100' 200' 300'

KEY MAP

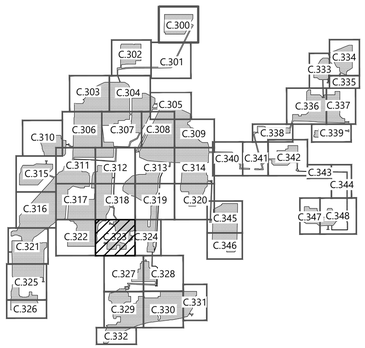

Excelsior Energy Center

Town of Byron, New York

Civil Site Plan - 24

NOT FOR CONSTRUCTION

DATE: 09/03/2020

SHEET: C.323

SEE SHEET C.319

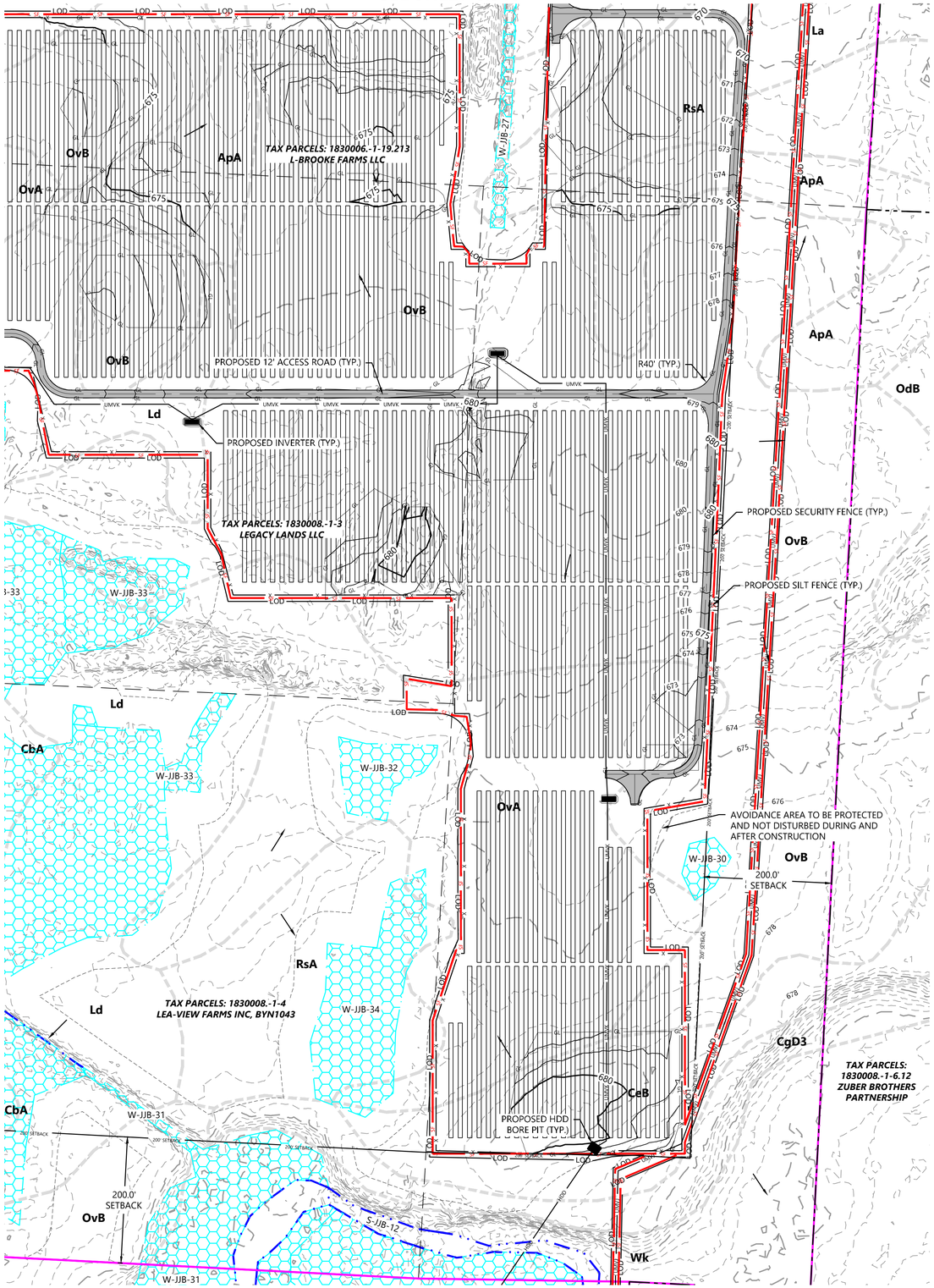

SEE SHEET C.323

SEE SHEET C.327

SEE SHEET C.328

LEGEND:

- PROPERTY LINE
- PARCEL LINE
- LOT LINE
- RIGHT-OF-WAY LINES
- EASEMENT LINES
- EX. STREAM
- EX. EDGE OF WATER
- EX. TREELINE
- EX. WETLAND
- EX. SOILS
- EX. OVERHEAD POWER
- EX. POWER POLE
- EX. UNDERGROUND POWER
- EX. GAS
- EX. OIL PIPELINE
- EX. GRAVEL ROAD
- EX. PAVED ROAD
- EX. INDEX CONTOUR
- EX. INTERVAL CONTOUR
- EX. FENCE
- EX. WATER LINE
- EX. CULVERT
- EX. STRUCTURE
- FLOW ARROW
- PROPOSED SOLAR ARRAY
- PROPOSED BUILDABLE AREA
- PROPOSED SETBACK LINE
- PROPOSED INVERTER
- PROPOSED BATTERY PACK
- PROPOSED ACCESS ROAD
- PROPOSED SECURITY FENCE
- PROPOSED UNDERGROUND COLLECTOR
- PROPOSED OVERHEAD POWERLINE
- PROPOSED HORIZONTAL DIRECTIONAL DRILLING
- PROPOSED LAYDOWN YARD
- PROPOSED LOW WATER CROSSING
- LIMIT OF DISTURBANCE
- PROPOSED CULVERT
- PROPOSED RIP RAP
- PROPOSED INDEX CONTOUR
- PROPOSED INTERVAL CONTOUR
- PROPOSED GRADING LIMITS
- PROPOSED SILT FENCE
- PROPOSED GRADE BREAK
- PROPOSED PARKING AREA
- PROPOSED ROCK CONSTRUCTION ENTRANCE
- PROPOSED HDD BORE PIT LOCATION
- PROPOSED DRAINAGE CROSSING
- PROPOSED FILTRATION BASIN

NOTES:

1. EXISTING STREAM IS BASED ON PUBLICLY AVAILABLE DATA AND SITE CONDITIONS MIGHT DIFFER FROM LOCATION SHOWN ON THE SITE PLAN.

KEY MAP

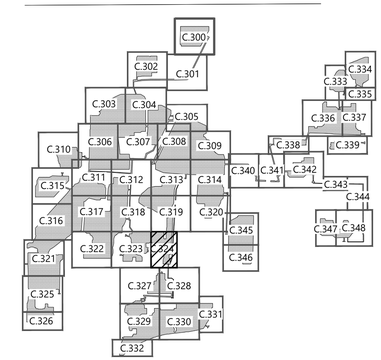

Westwood

Phone (952) 937-5150
Fax (952) 937-5822
Toll Free (888) 937-5150

12701 Whitewater Drive, Suite #300
Minnetonka, MN 55343
westwoodps.com

Westwood Development Consultants, LLC

PREPARED FOR:

NEXTera ENERGY

700 Universe Boulevard
Juno Beach, FL 33408

REVISIONS:

#	DATE	COMMENT
A	06/12/20	Issued for Review
B	09/03/20	Issued for Review

Excelsior Energy Center

Town of Byron, New York

Civil Site Plan - 25

NOT FOR CONSTRUCTION

DATE: 09/03/2020

SHEET: C.324

SEE SHEET C.321

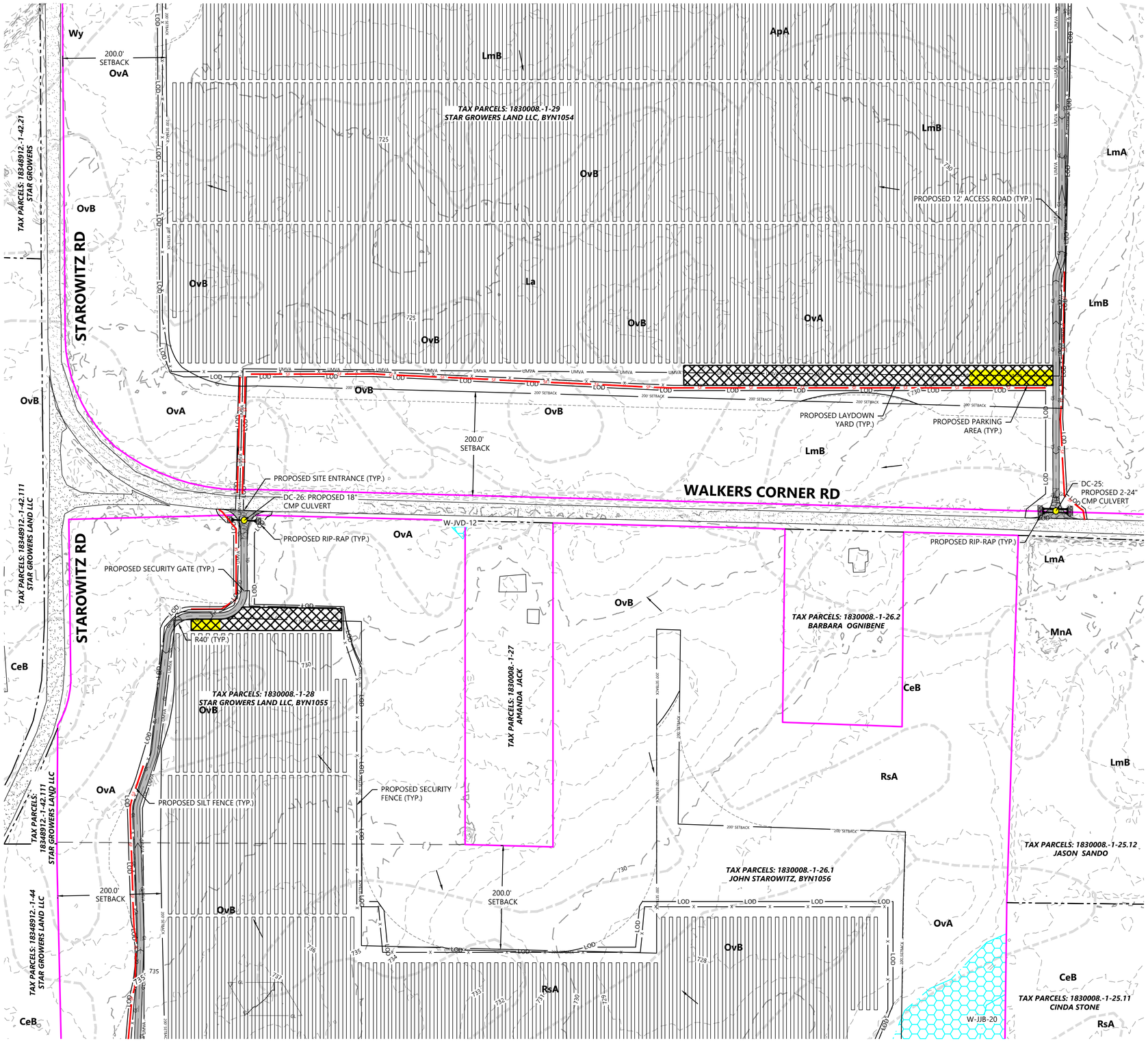

SEE SHEET C.326

LEGEND:

- PROPERTY LINE
- PARCEL LINE
- LOT LINE
- RIGHT-OF-WAY LINES
- EASEMENT LINES
- EX. STREAM
- EX. EDGE OF WATER
- EX. TREELINE
- EX. WETLAND
- EX. SOILS
- EX. OVERHEAD POWER
- EX. POWER POLE
- EX. UNDERGROUND POWER
- EX. GAS
- EX. OIL PIPELINE
- EX. GRAVEL ROAD
- EX. PAVED ROAD
- EX. INDEX CONTOUR
- EX. INTERVAL CONTOUR
- EX. FENCE
- EX. WATER LINE
- EX. CULVERT
- EX. STRUCTURE
- FLOW ARROW
- PROPOSED SOLAR ARRAY
- PROPOSED BUILDABLE AREA
- PROPOSED SETBACK LINE
- PROPOSED INVERTER
- PROPOSED BATTERY PACK
- PROPOSED ACCESS ROAD
- PROPOSED SECURITY FENCE
- PROPOSED UNDERGROUND COLLECTOR
- PROPOSED OVERHEAD POWERLINE
- PROPOSED HORIZONTAL DIRECTIONAL DRILLING
- PROPOSED LAYDOWN YARD
- PROPOSED LOW WATER CROSSING
- LIMIT OF DISTURBANCE
- PROPOSED CULVERT
- PROPOSED RIP RAP
- PROPOSED INDEX CONTOUR
- PROPOSED INTERVAL CONTOUR
- PROPOSED GRADING LIMITS
- PROPOSED SILT FENCE
- PROPOSED GRADE BREAK
- PROPOSED PARKING AREA
- PROPOSED ROCK CONSTRUCTION ENTRANCE
- PROPOSED HDD BORE PIT LOCATION
- PROPOSED DRAINAGE CROSSING
- PROPOSED FILTRATION BASIN

NOTES:

1. EXISTING STREAM IS BASED ON PUBLICLY AVAILABLE DATA AND SITE CONDITIONS MIGHT DIFFER FROM LOCATION SHOWN ON THE SITE PLAN.

Westwood

Phone (952) 937-5150
Fax (952) 937-5822
Toll Free (888) 937-5150
12701 Whitewater Drive, Suite #300
Minnetonka, MN 55343
westwoodps.com

Westwood Development Consultants, LLC

PREPARED FOR:

NEXTera ENERGY

700 Universe Boulevard
Juno Beach, FL 33408

REVISIONS:

#	DATE	COMMENT
A	06/12/20	Issued for Review
B	09/03/20	Issued for Review

0' 100' 200' 300'

KEY MAP

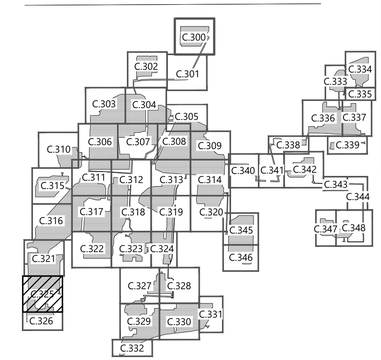

Excelsior Energy Center

Town of Byron, New York

Civil Site Plan - 26

NOT FOR CONSTRUCTION

DATE: 09/03/2020

SHEET: C.325

SEE SHEET C.325

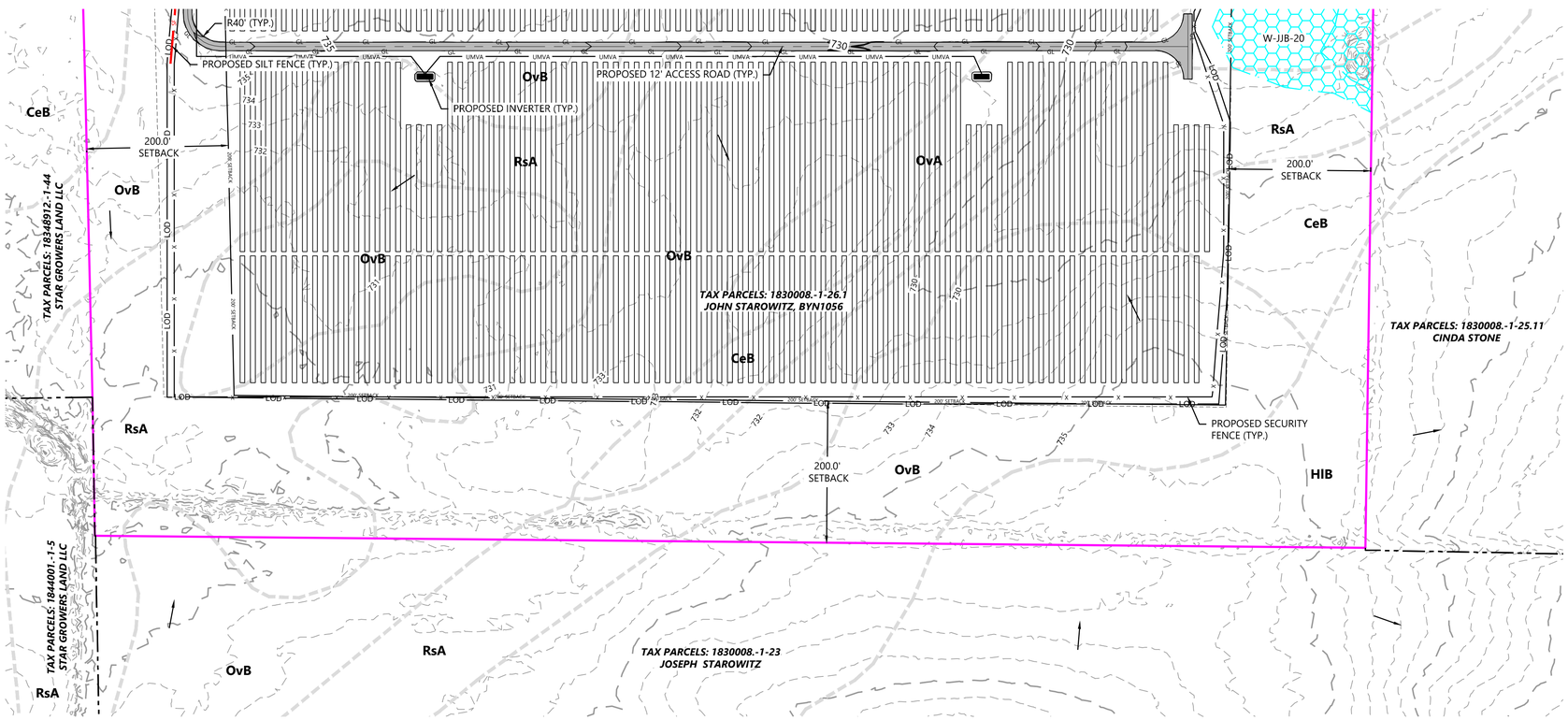

LEGEND:

- PROPERTY LINE
- PARCEL LINE
- LOT LINE
- RIGHT-OF-WAY LINES
- EASEMENT LINES
- EX. STREAM
- EX. EDGE OF WATER
- EX. TREELINE
- EX. WETLAND
- EX. SOILS
- EX. OVERHEAD POWER
- EX. POWER POLE
- EX. UNDERGROUND POWER
- EX. GAS
- EX. OIL PIPELINE
- EX. GRAVEL ROAD
- EX. PAVED ROAD
- EX. INDEX CONTOUR
- EX. INTERVAL CONTOUR
- EX. FENCE
- EX. WATER LINE
- EX. CULVERT
- EX. STRUCTURE
- FLOW ARROW
- PROPOSED SOLAR ARRAY
- PROPOSED BUILDABLE AREA
- PROPOSED SETBACK LINE
- PROPOSED INVERTER
- PROPOSED BATTERY PACK
- PROPOSED ACCESS ROAD
- PROPOSED SECURITY FENCE
- PROPOSED UNDERGROUND COLLECTOR
- PROPOSED OVERHEAD POWERLINE
- PROPOSED HORIZONTAL DIRECTIONAL DRILLING
- PROPOSED LAYDOWN YARD
- PROPOSED LOW WATER CROSSING
- LIMIT OF DISTURBANCE
- PROPOSED CULVERT
- PROPOSED RIP RAP
- PROPOSED INDEX CONTOUR
- PROPOSED INTERVAL CONTOUR
- PROPOSED GRADING LIMITS
- PROPOSED SILT FENCE
- PROPOSED GRADE BREAK
- PROPOSED PARKING AREA
- PROPOSED ROCK CONSTRUCTION ENTRANCE
- PROPOSED HDD BORE PIT LOCATION
- PROPOSED DRAINAGE CROSSING
- PROPOSED FILTRATION BASIN

NOTES:

1. EXISTING STREAM IS BASED ON PUBLICLY AVAILABLE DATA AND SITE CONDITIONS MIGHT DIFFER FROM LOCATION SHOWN ON THE SITE PLAN.

KEY MAP

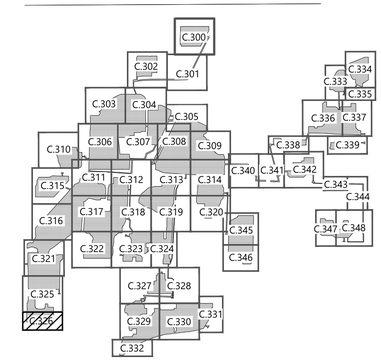

Westwood

Phone (952) 937-5150
Fax (952) 937-5822
Toll Free (888) 937-5150

12701 Whitewater Drive, Suite #300
Minnetonka, MN 55343
westwoodps.com

Westwood Development Consultants, LLC

PREPARED FOR:

NEXTera ENERGY

700 Universe Boulevard
Juno Beach, FL 33408

REVISIONS:

#	DATE	COMMENT
A	06/12/20	Issued for Review
B	09/03/20	Issued for Review

0' 100' 200' 300'

Excelsior Energy Center

Town of Byron, New York

Civil Site Plan - 27

NOT FOR CONSTRUCTION

DATE: 09/03/2020

SHEET: C.326